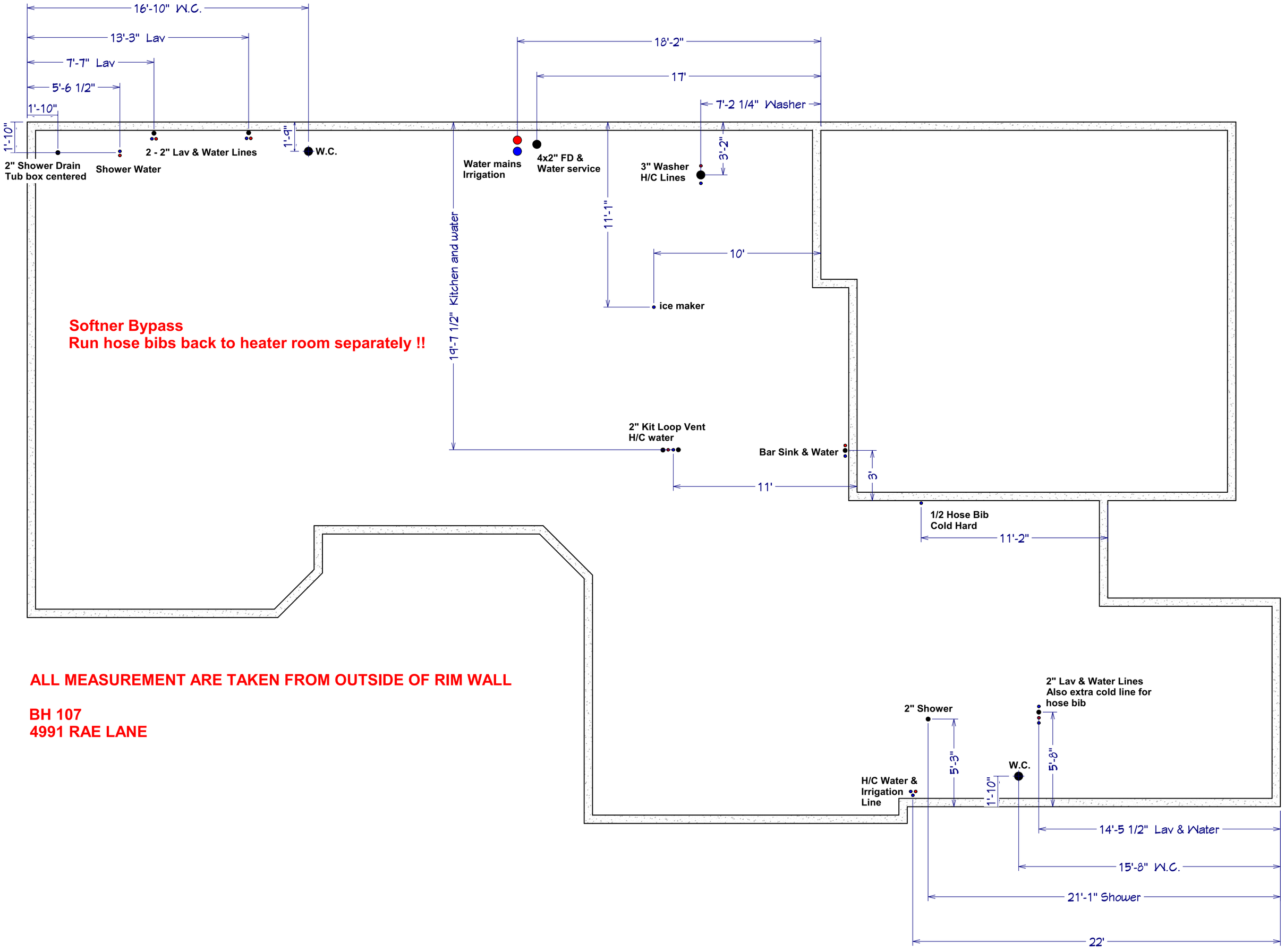

ALL MEASUREMENT ARE TAKEN FROM OUTSIDE OF RIM WALL

BH 107
4991 RAE LANE