PLOT PLAN
LOT 4715 (10,010 SF) 0.2298 ACRES
CENTENNIAL RUN, SECTION THREE, BLOCK "B"
SECTION 31, TOWN 2, RANGE 4
CITY OF TRENTON, BUTLER COUNTY, OHIO
FOR: CRISTO HOMES

10 0 10 20 30

JUST ASK MISSY LLC
837 PRESCOT CIRCLE

SETBACKS:
FRONT YARD=35'
REAR YARD=40'
SIDE YARD=8' MIN/20' TOTAL

MS=662.60
MFOE=669.1
MROE=668.4

QUANTITIES

TOTAL LOT AREA	10,010	sq. ft.
CITY WALK	270	sq. ft.
HOUSE WALK	49	sq. ft.
DRIVE	656	sq. ft.
APRON	111	sq. ft.
PATIO AND PORCHES	33	sq. ft.
DECK	–	sq. ft.
SEEDING AREA	8564	sq. ft.

STATE OF OHIO
KENNETH R. COMBS
7311
REGISTERED
PROFESSIONAL SURVEYOR

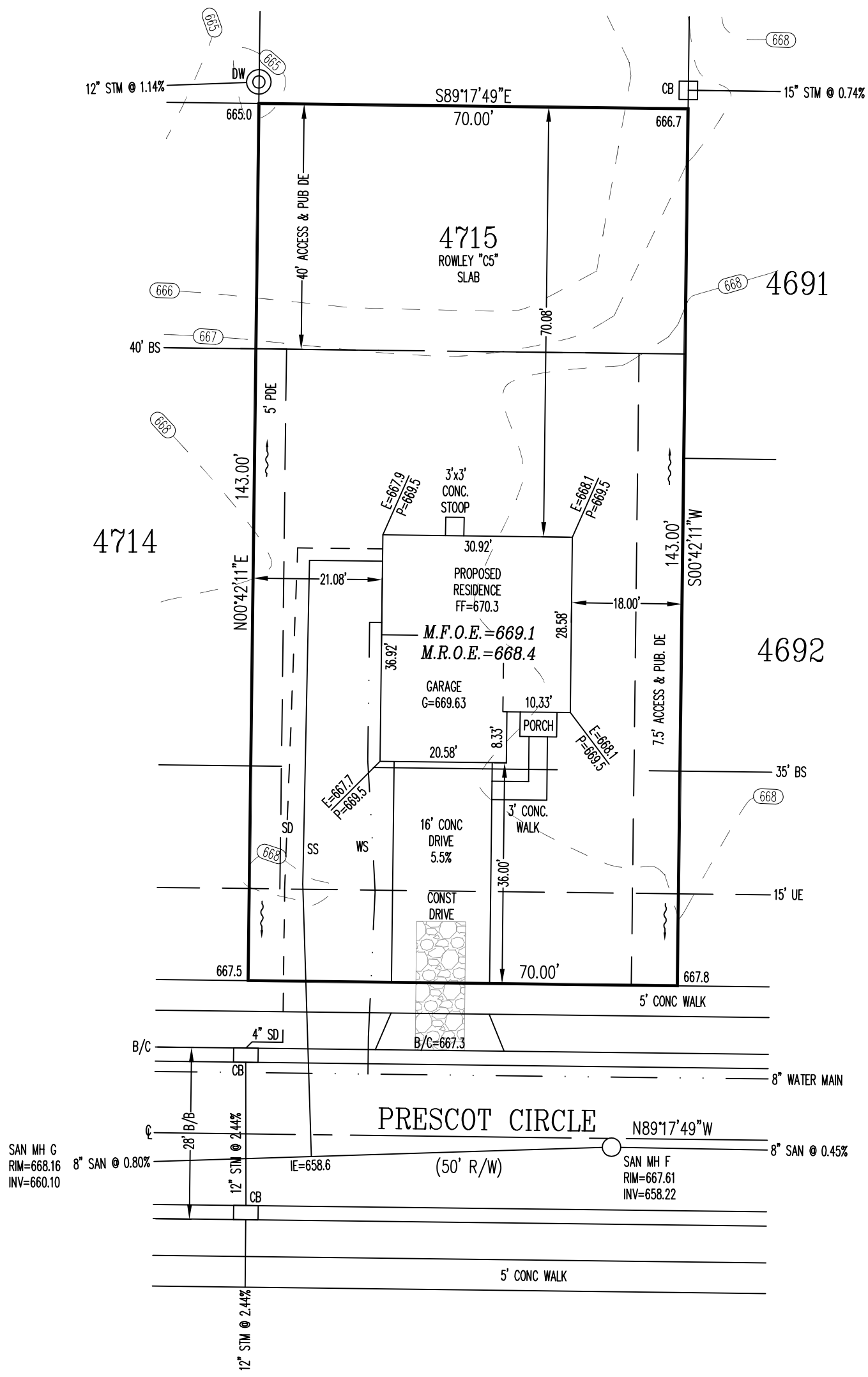

INFORMATION FROM CONSTRUCTION DRAWINGS.

CONTRACTOR IS TO VERIFY LOCATION AND DEPTH OF WATER AND UTILITY SERVICES BEFORE CONSTRUCTION.

UNLESS F.F.E., M.O.E. OR M.B.E. ARE FIELD VERIFIED BY AN ENGINEERING FIRM, CONTRACTOR TAKES FULL RESPONSIBILITY FOR THE FINISH FLOOR ELEVATION.

A STANDARD FORMULA WAS USED TO DETERMINE FINISH FLOOR GRADE. FINAL FINISH FLOOR ELEVATION IS CONTRACTOR'S RESPONSIBILITY.

GRADE/SPOT ELEVATIONS, FOUNDATION ELEVATIONS ARE ONLY RECOMMENDATIONS AND MAY VARY DUE TO SITE CONDITIONS.

ALL ELEVATIONS ARE EXISTING UNLESS SPECIFIED WITH AN "E" FOR EXISTING OR A "P" FOR PROPOSED.

BUILDER SHALL PROVIDE POSITIVE DRAINAGE AROUND AND AWAY FROM HOUSES.

APEX IS NOT RESPONSIBLE FOR SOIL CONDITIONS OR GROUND WATER CONDITIONS.

APEX ENGINEERING & SURVEYING INC.
ADVISES AGAINST HOLDING THE MINIMUM REQUIRED DISTANCE ON ANY AND ALL SETBACKS, FRONT, REAR, AND SIDES. THE BUILDER ASSUMES ALL RESPONSIBILITIES FOR ANY BUILDING ENCROACHMENTS THAT MAY OCCUR.

TOPOGRAPHY FROM APEX FIELD SURVEY, DATED DEC. 5, 2019, AND MAY NOT REFLECT CURRENT CONDITIONS.

SCALE: 1"=20'
DATE: 09/15/2020
DRAWN: JLS
DESIGNED: –
CHECKED: KRC

APEX ENGINEERING & SURVEYING, INC.
1068 N. UNIVERSITY BLVD MIDDLETOWN, OHIO 45042
PH.-(513) 424-5202 OR (513) 932-8991 FAX - (513) 424-6202

REVISIONS:
1.
2.
3.
4.

PROJECT: CENTENNIALRUN
DRAWING: 202067PA

SHEET 1 OF 1

CRI20189.DWG • PLANS PREPARED BY SABO DESIGN ASSOCIATES • 550 WARDS CORNER ROAD SUITE 201, LOVELAND, OH 45140 • 513.683.1236 • SABODESIGNASSOC@SABODA.NET • © COPYRIGHT 2020 SABO DESIGN ASSOCIATES
H:\Jobs in Progress\Kga\CRI 20189 C7-4715 (Rowley Slab)\CRI 20189 C7-4715 (Rowley Slab).dwg Thursday, May 16, 2019 9:34:51 AM

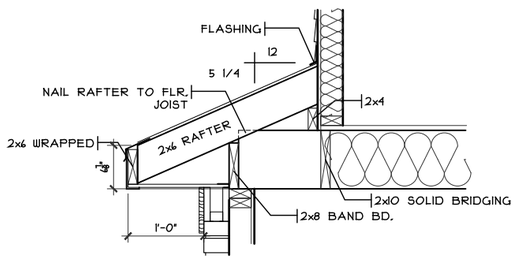

GARAGE DETAIL

1 / A1

SCALE: 1/2" = 1'-0"

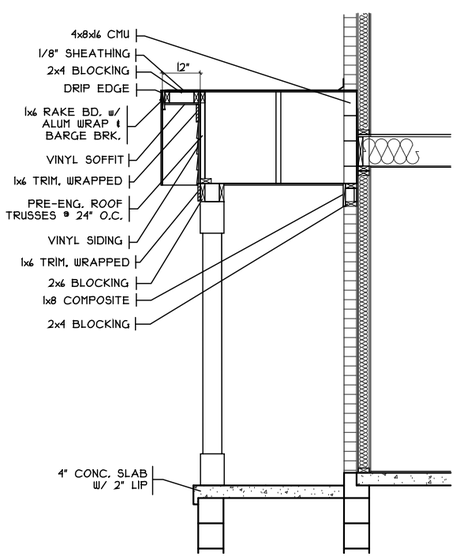

PORCH DETAIL

SCALE: 1/2" = 1'-0"

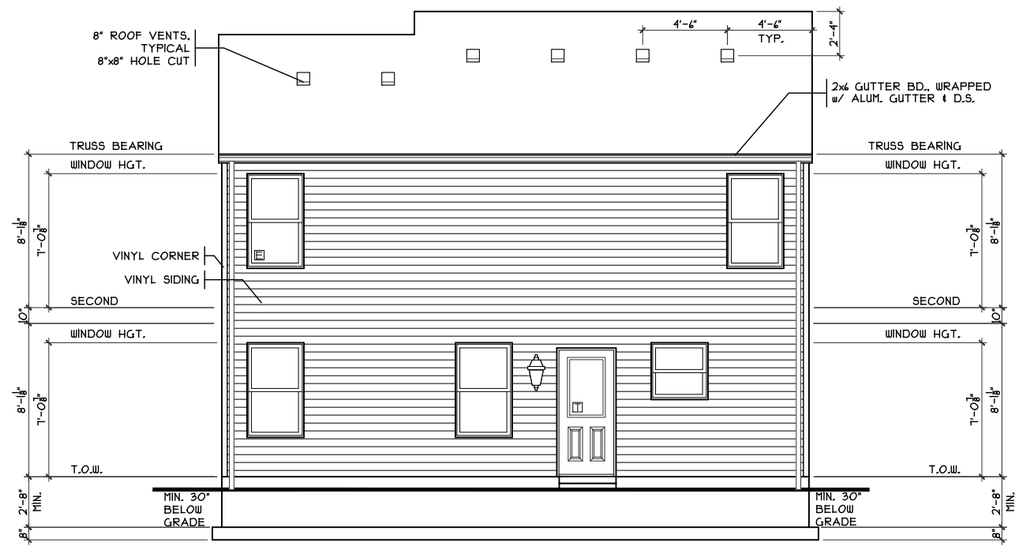

REAR ELEVATION

SCALE: 1/8" = 1'-0"

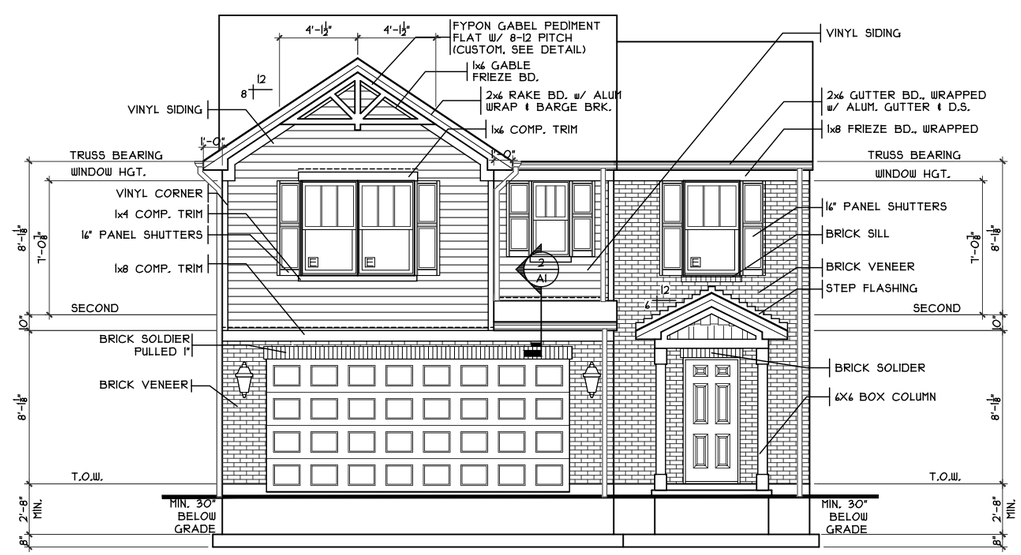

FRONT ELEVATION

SCALE: 1/8" = 1'-0"

SHEET INDEX	
SHT#	DESCRIPTION
A1	Front and Rear Elevations
A1a	Left and Right Elevations
A2	Foundation Plan
A3	First Floor Plan
A4	Second Floor Plan
A5	Typical Wall Sections/Stair Section
A6	Typical Framing Details (Aluminum)
G1	General Notes

NOTE:
PLANS PRINTED ON 24x36 SHEETS TO BE SCALABLE AT FULL SCALE, 1/4" = 1'-0"
PLANS PRINTED ON 11x17 SHEETS TO BE SCALABLE AT HALF SCALE, 1/8" = 1'-0"

2S1656B4 PLAN INFO	
4	BDRMS
2.5	BATHS
2	CAR GARAGE
9'	1ST FLR. CLG.
SQUARE FOOTAGE	
TOTAL	1656
MAIN	635
UPPER	1021
LOWER (SLAB)	561
GARAGE (SLAB)	384

KEY PLAN

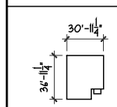

OPTIONS

Issue Dates

Review

Rowley Slab - C5 - Vinyl

Cristo Homes reserves all property rights in these plans. These plans are not to be reproduced, changed, or copied in any manner. They are not to be given to a third party, either in full or in part, without first receiving written permission from Cristo Homes. In the event these plans are used by a third party, Cristo Homes shall be held harmless.

C7-4715

Proposed Residence:

Just Ask Missy
837 Prescot Circle
Centennial Run 70's Lot #4715
Trenton
Butler County

CRISTO HOMES
7594-A Tylers Place Blvd.
West Chester, OH 45069
513.755.0570 www.cristohomes.com

Front And Rear Elevations

Plan: Rowley Slab
Date : 8/20/20
Drawn: KMA
Scale : As Noted
Revised: 9/1/20
Sheet : 1 of 11

A1

CRI20189.DWG • PLANS PREPARED BY SABO DESIGN ASSOCIATES • 550 WARDS CORNER ROAD SUITE 201, LOVELAND, OH 45140 • 513.683.1236 • SABODESIGNASSOC@SABODA.NET • © COPYRIGHT 2020 SABO DESIGN ASSOCIATES
H:\Jobs in Progress\Kga\CRI 20189 C1-4115 (Rowley Slab)\CRI 20189 C1-4115 (Rowley Slab).dwg Thursday, May 14, 2019 9:34:51 AM

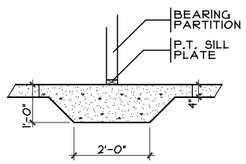

1/A2 THICKENED SLAB

SCALE: 1/4" = 1'-0"

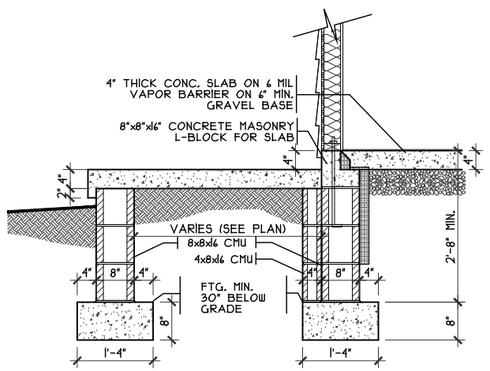

PORCH DETAIL

SCALE: 3/8" = 1'-0"

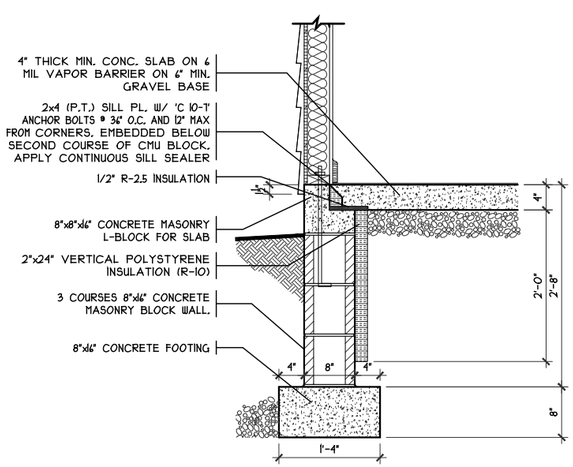

SOG DETAIL

SCALE: 1/8" = 1'-0"

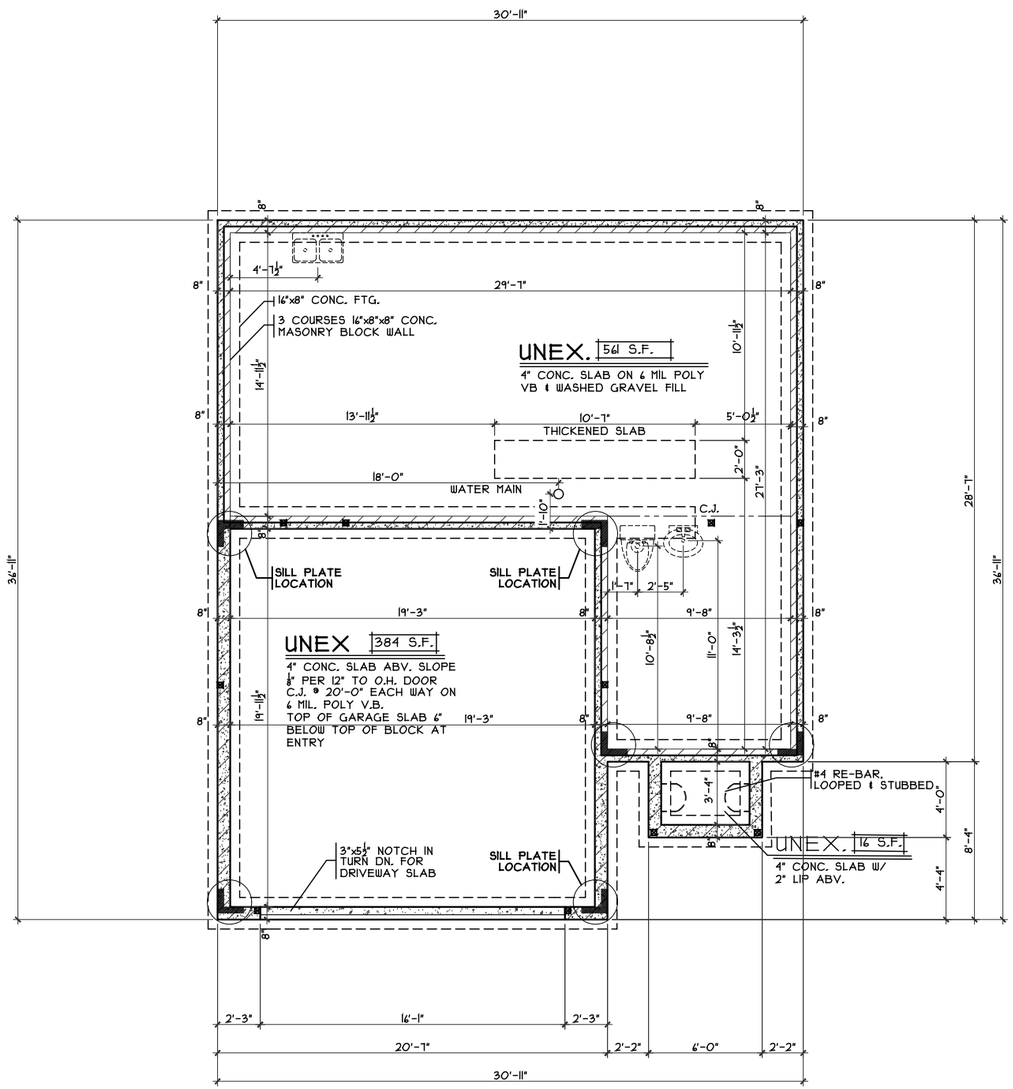

FOUNDATION PLAN

SCALE: 1/8" = 1'-0"

OPTIONS

Issue Dates

Review

Rowley Slab - C5 - Vinyl

Cristo Homes reserves all property rights in these plans. These plans are not to be reproduced, changed, or copied in any manner. They are not to be given to a third party, either in full or in part, without first receiving written permission from Cristo Homes. In the event these plans are used by a third party, Cristo Homes shall be held harmless.

C7-4715

Proposed Residence:
Just Ask Missy
837 Prescot Circle
Centennial Run 70's Lot #4715
Trenton
Butler County

CRISTO HOMES
7594-A Tylers Place Blvd.
West Chester, OH 45069
513.755.0570 www.cristohomes.com

Foundation Plan

Plan: Rowley Slab
Date : 8/20/20
Drawn: KMA
Scale : As Noted
Revised: 9/1/20
Sheet : 3 of 11

A2

CR120189.DWG • PLANS PREPARED BY SABO DESIGN ASSOCIATES • 550 WARDS CORNER ROAD SUITE 201, LOVELAND, OH 45140 • 513.683.1236 • SABODESIGNASSOC@SABODA.NET • © COPYRIGHT 2020 SABO DESIGN ASSOCIATES

H:\Jobs in Progress\Kga\CRI 20189 C7-4715 (Rowley Slab)\CRI 20189 C7-4715 (Rowley Slab).dwg Thursday, May 14, 2019 9:34:51 AM

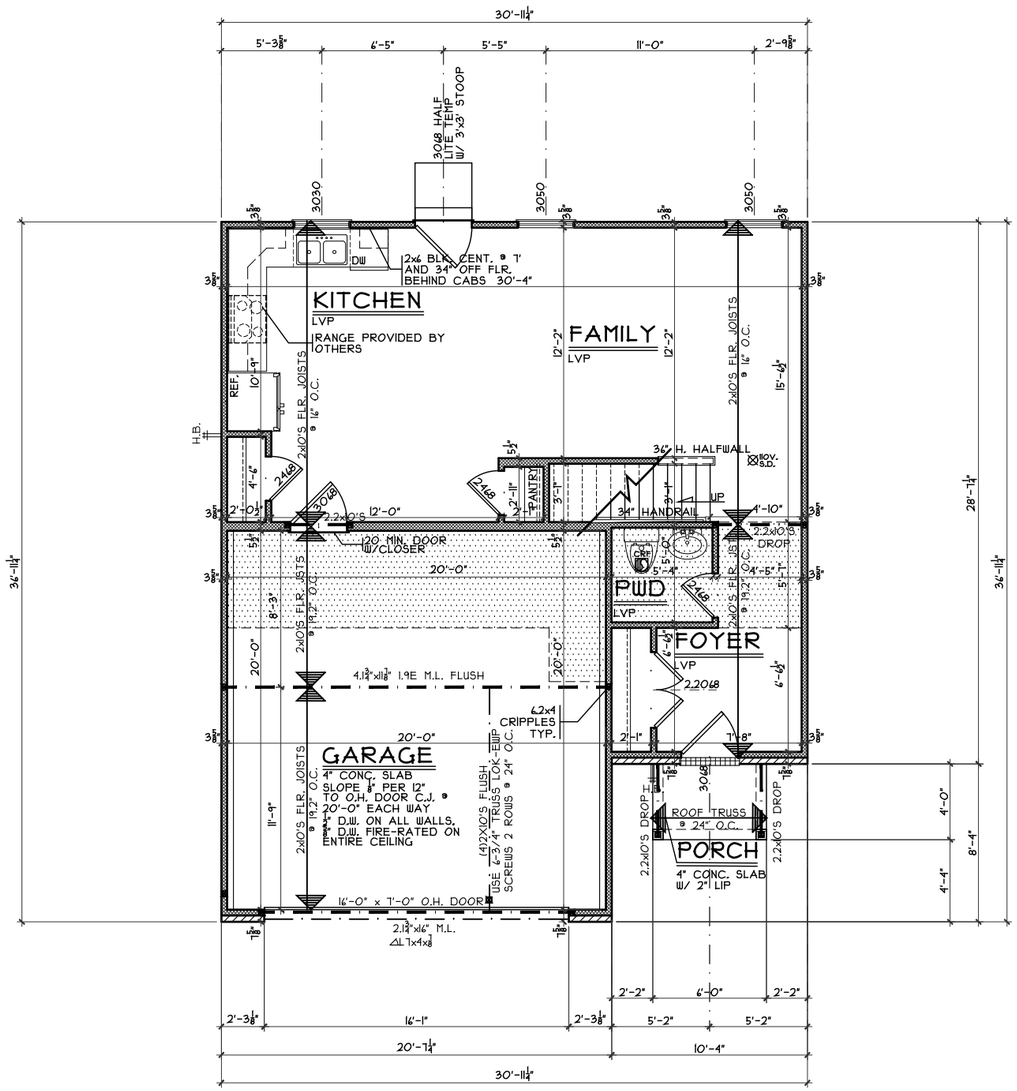

FIRST FLOOR PLAN

SCALE: 1/8" = 1'-0" 635 S.F

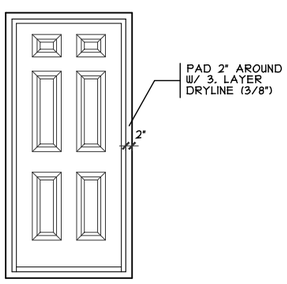

DOOR FRAMING DTL.

SCALE: 1/4" = 1'-0"

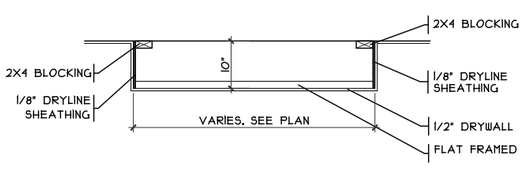

DROP CLG. DETAIL

SCALE: 1/8" = 1'-0" GARAGE

OPTIONS

Rowley Slab - C5 - Vinyl

Issue Dates

Review

Cristo Homes reserves all property rights in these plans. These plans are not to be reproduced, changed, or copied in any manner. They are not to be given to a third party, either in full or in part, without first receiving written permission from Cristo Homes. In the event these plans are used by a third party, Cristo Homes shall be held harmless.

Trenton

Butler County

C7-4715

Proposed Residence:

Just Ask Missy

837 Prescot Circle

Centennial Run 70's Lot #4715

CRISTO HOMES
7994-A Tylers Place Blvd.
West Chester, OH 45069
513.755.0570 www.cristohomes.com

First Floor Plan

Plan: Rowley Slab
Date : 8/20/20
Drawn: KMA
Scale : As Noted
Revised: 9/1/20
Sheet : 4 of 11

A3

CR120189.DWG • PLANS PREPARED BY SABO DESIGN ASSOCIATES • 550 WARDS CORNER ROAD SUITE 201, LOVELAND, OH 45140 • 513.683.1236 • SABODESIGNASSOC@SABODA.NET • © COPYRIGHT 2020 SABO DESIGN ASSOCIATES

H:\Jobs in Progress\Kaga\CRI 20189 C1-4715 (Rowley Slab)\CRI 20189 C1-4715 (Rowley Slab).dwg Thursday, May 14, 2019 9:34:51 AM

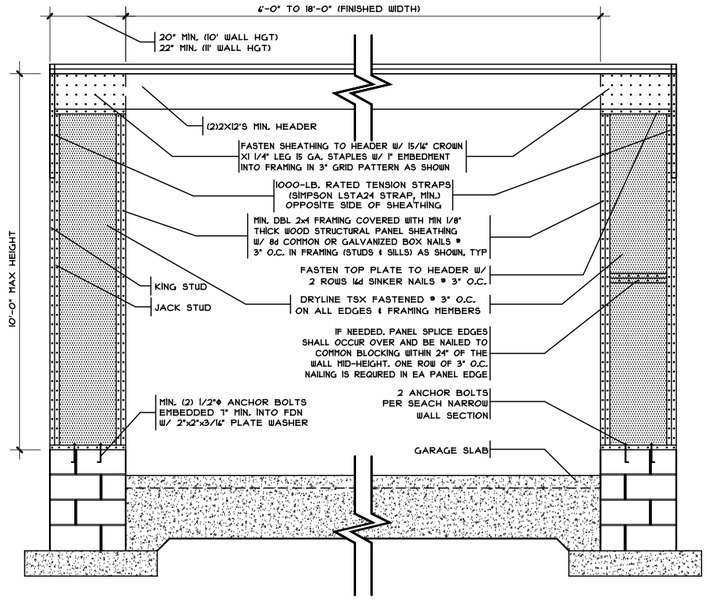

WALL OVER POURED FOUNDATION

SCALE: 1/4" = 1'-0"

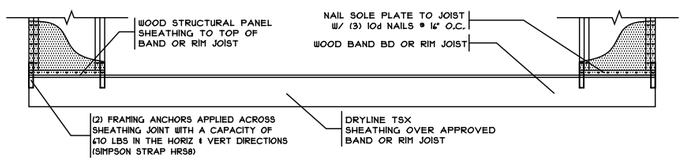

WALL OVER RAISED WOOD FLOOR

SCALE: 1/4" = 1'-0" FRAMING ANCHOR OPTION

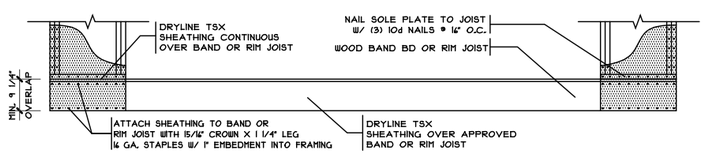

WALL OVER RAISED WOOD FLOOR

SCALE: 1/4" = 1'-0" OVERLAP OPTION

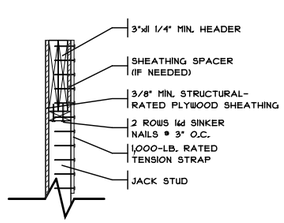

SECTION

1" = 1'-0"

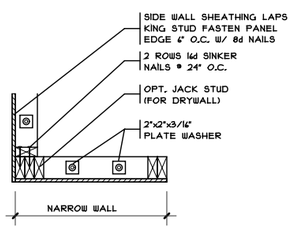

PLAN VIEW

1" = 1'-0"

METHOD CS-PF
CONTINUOUSLY SHEATHED PORTAL FRAME PANEL CONSTRUCTION

SCALE PER DETAIL SLAB FDN

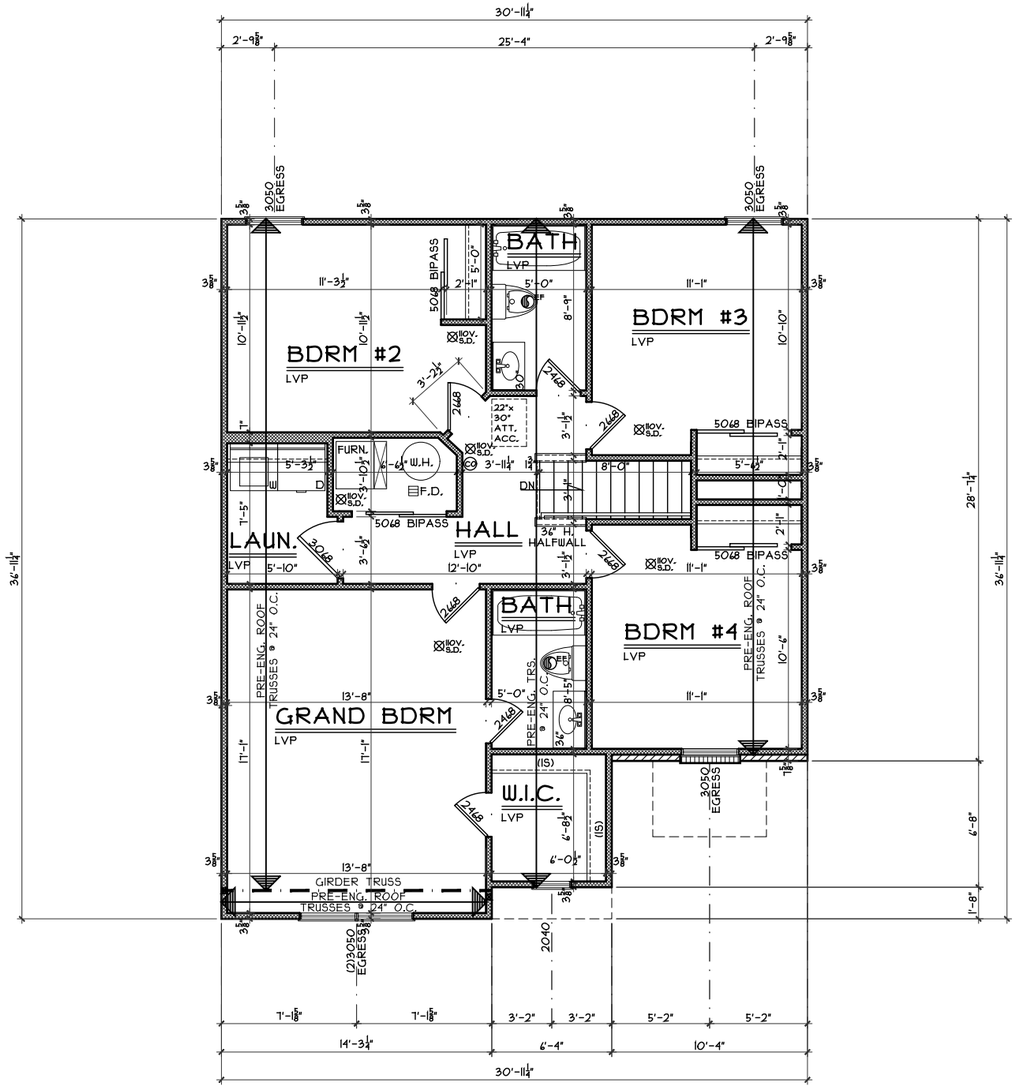

SECOND FLOOR PLAN

SCALE: 1/8" = 1'-0" 1021 S.F

OPTIONS

Issue Dates

Review

Rowley Slab - C5 - Vinyl

Cristo Homes reserves all property rights in these plans. These plans are not to be reproduced, changed, or copied in any manner. They are not to be given to a third party, either in full or in part, without first receiving written permission from Cristo Homes. In the event these plans are used by a third party, Cristo Homes shall be held harmless.

Trenton
Butler County

C7-4715

Proposed Residence:
Just Ask Missy
837 Prescot Circle
Centennial Run 70's Lot #4715

CRISTO HOMES
7594-A Tylers Place Blvd.
West Chester, OH 45069
513.755.0570 www.cristohomes.com

Second Floor Plan

Plan: Rowley Slab
Date : 8/20/20
Drawn: KMA
Scale : As Noted
Revised: 9/1/20
Sheet : 6 of 11

A4