PLOT PLAN
LOT 9168 (7,736 SF) 0.1776 AC.
FAIRFIELD FALLS, BLOCK C
FAIRFIELD TWP., BUTLER CO., OH
FOR: CRISTO HOMES

HIGHLEY RESIDENCE
5304 RIVER RIDGE DRIVE

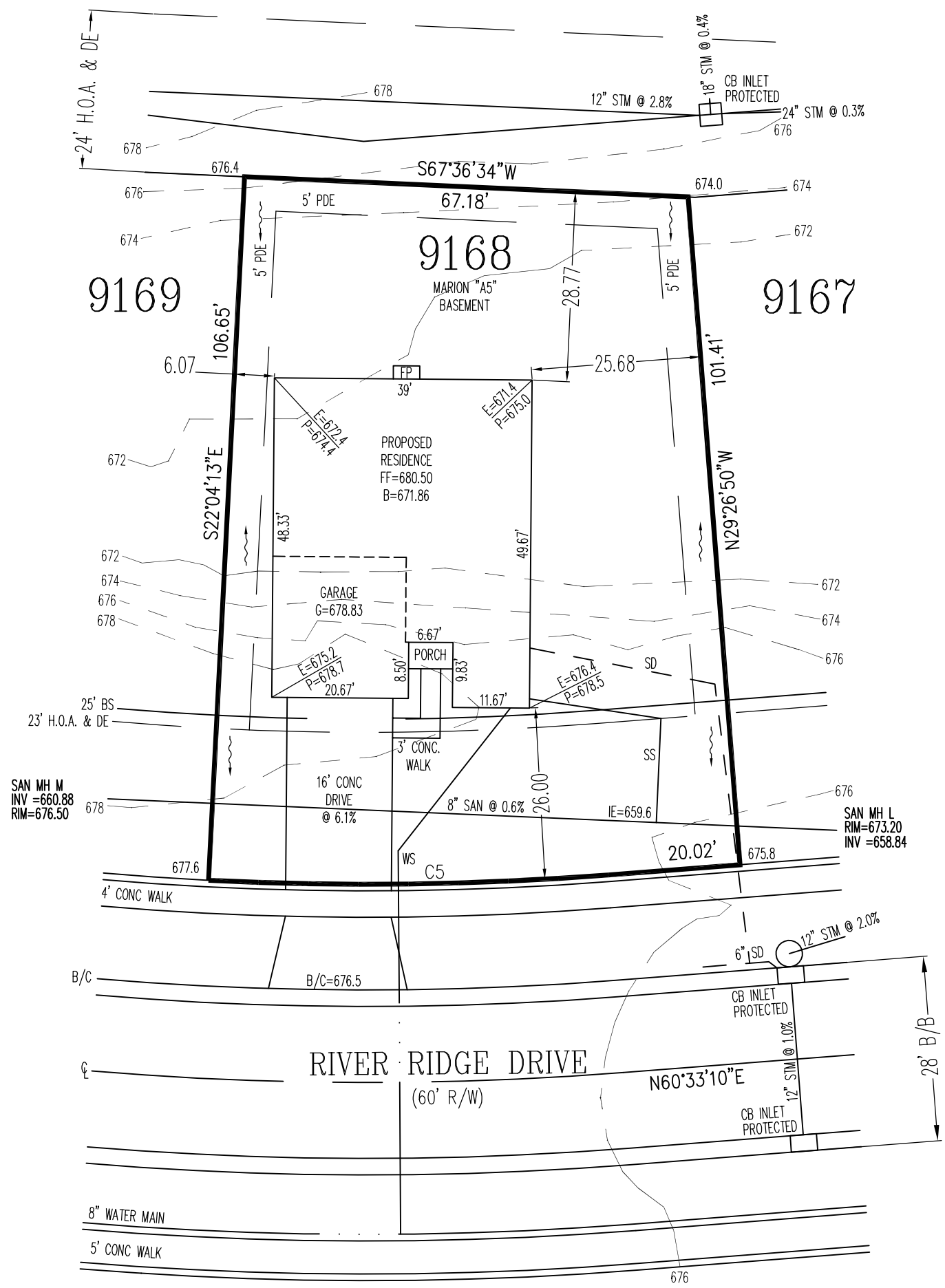

QUANTITIES

TOTAL LOT AREA=7,737 SF
CITY WALK=260 SF
HOUSE WALK=45 SF
DRIVE=532 SF
APRON=204 SF
PATIO & PORCH=27 SF
SEEDING=6,104 SF

WATER & SANITARY SERVICES SHOWN GRAPHICALLY. ACTUAL LOCATIONS UNKOWN.

INFORMATION FROM CONSTRUCTION DRAWINGS.

CONTRACTOR IS TO VERIFY LOCATION AND DEPTH OF WATER AND UTILITY SERVICES AND MAINS BEFORE CONSTRUCTION. WATER SERVICE SHOWN HEREON IS IN AN APPROXIMATE GRAPHICAL LOCATION, EXACT LOCATION IS UNKNOWN.

ALL ELEVATIONS ARE EXISTING UNLESS SPECIFIED WITH AN "E" FOR EXISTING OR A "P" FOR PROPOSED.

UNLESS F.F.E., M.O.E. OR M.B.E. ARE FIELD VERIFIED BY AN ENGINEERING FIRM, CONTRACTOR TAKES FULL RESPONSIBILITY FOR THE FINISH FLOOR ELEVATION.

A STANDARD FORMULA WAS USED TO DETERMINE FINISH FLOOR GRADE. FINAL FINISH FLOOR ELEVATION IS CONTRACTOR'S RESPONSIBILITY.

PRIOR TO CONSTRUCTION, A GEOTECHNICAL REPORT SHALL BE OBTAINED BY THE BUILDER. APEX ASSUMES NO RESPONSIBILITY FOR SOIL CONDITIONS.

BUILDER SHALL PROVIDE POSITIVE DRAINAGE AROUND AND AWAY FROM HOUSES.

APEX ENGINEERING & SURVEYING INC.
ADVISES AGAINST HOLDING THE MINIMUM REQUIRED DISTANCE ON ANY AND ALL SETBACKS, FRONT, REAR, AND SIDES. THE BUILDER ASSUMES ALL RESPONSIBILITIES FOR ANY BUILDING ENCROACHMENTS THAT MAY OCCUR.

STATE OF OHIO
KENNETH R. COMBS
7311
REGISTERED
PROFESSIONAL SURVEYOR

C5
R=470.00'
L=60.51'

TOPOGRAPHY/CONTOURS ARE FROM COUNTY GIS AND MAY VARY FROM ACTUAL CONDITIONS

SETBACKS
FRONT=25'
REAR=15'
SIDE=5'

SCALE: 1"=20'
DATE: 5/18/2018
DRAWN: REW
DESIGNED: X
CHECKED: X

APEX ENGINEERING & SURVEYING, INC.
1068 N. UNIVERSITY BLVD MIDDLETOWN, OHIO 45042
PH.-(513) 424-5202 OR (513) 932-8991 FAX - (513) 424-6202

REVISIONS:
1.
2.
3.
4.

PROJECT: FAIRFIELDFALLS
DRAWING: 180933PA

SHEET 1 OF 1

CRI1713.DWG • PLANS PREPARED BY SABO DESIGN ASSOCIATES • 550 WARDS CORNER ROAD SUITE 201, LOVELAND, OH 45140 • 513.683.1236 • SABODESIGNASSOC@SABODA.NET • © COPYRIGHT 2018 SABO DESIGN ASSOCIATES
H:\Jobs in Progress\All\CRI 18055 FF-9168 (Marion Basement)\CRI 18055 FF-9168 (Marion Basement).dwg Thursday, January 11, 2018 4:10:16 PM

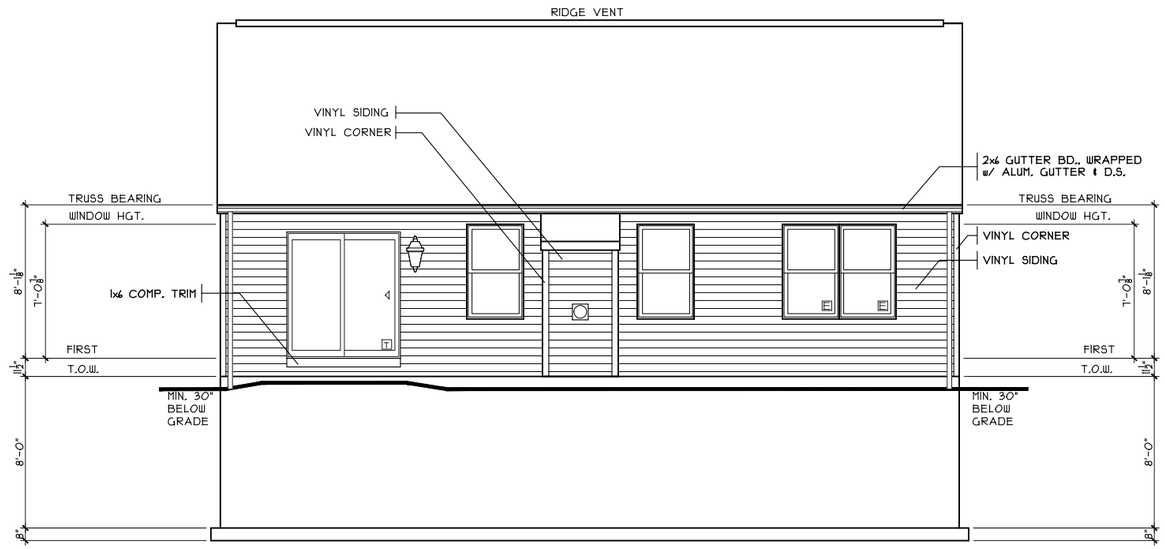

REAR ELEVATION

SCALE: 1/8" = 1'-0"

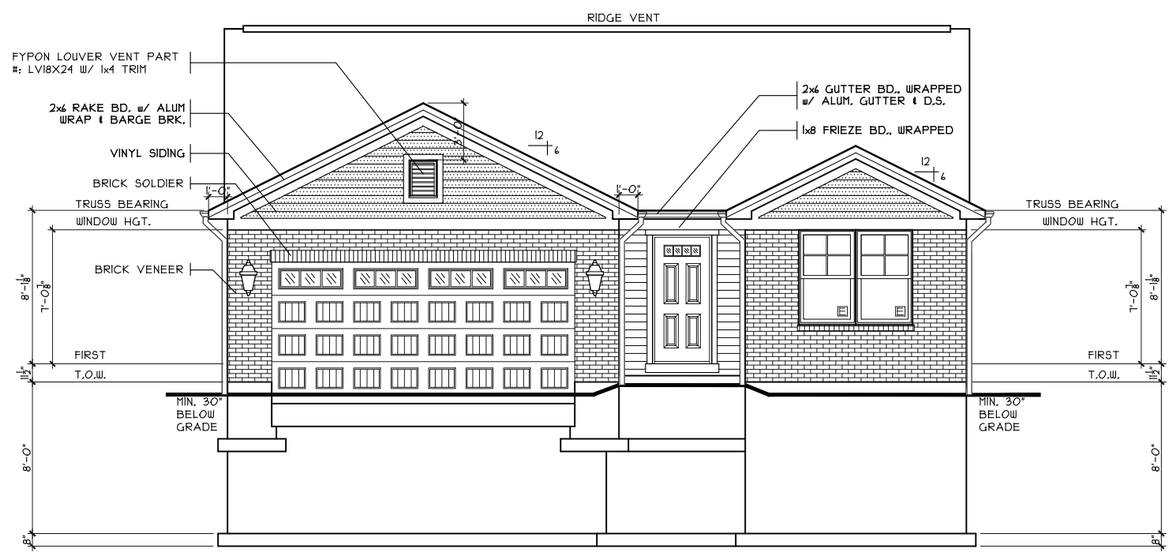

FRONT ELEVATION

SCALE: 1/8" = 1'-0" ELEVATION A

SHEET INDEX	
SHT#	DESCRIPTION
A1	Front and Rear Elevations (A)
A1a	Left and Right Elevations (A)
A2	Foundation Plan
A2a	Lower Level Plan
A3	First Floor Plan
A4	Typical Wall Sections/Stair Section
A5	Typical Framing Details (Aluminum)
G1	General Notes
E1	Electrical Plan
S1	First Floor Joist Layout /Roof Plan

NOTE:
PLANS PRINTED ON 24x36 SHEETS TO BE SCALABLE AT FULL SCALE. 1/4" = 1'-0"
PLANS PRINTED ON 11x17 SHEETS TO BE SCALABLE AT HALF SCALE. 1/8" = 1'-0"

R142IB3 PLAN INFO

3 BDRMS
2 BATHS
2 CAR GARAGE
8' 1ST FLR. CLG.

SQUARE FOOTAGE

TOTAL	1421
MAIN	1421
UPPER	N/A
LOWER (FINISH)	N/A
LOWER (SLAB)	1314
GARAGE (SLAB)	375

KEY PLAN

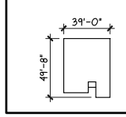

OPTIONS

Issue Dates

Review

Marion Basement - Style - Vinyl

Cristo Homes reserves all property rights in these plans. These plans are not to be reproduced, changed, or copied in any manner. They are not to be given to a third party, either in full or in part, without first receiving written permission from Cristo Homes. In the event these plans are used by a third party, Cristo Homes shall be held harmless.

FF-9168

Proposed Residence:
Highley Residence
5304 River Ridge Dr.
Fairfield Falls lot# 9168

Fairfeild
Butter County

CRISTO HOMES
7594-A Tylers Place Blvd.
West Chester, OH 45069
513.755.0570 www.cristohomes.com

Elevation A

Plan: Marion Basement
Date : 5.10.2018
Drawn: AR
Scale : As Noted
Revised: 6/6/2018
Sheet : 1 of 10

A1

CRI17113.DWG • PLANS PREPARED BY SABO DESIGN ASSOCIATES • 550 WARDS CORNER ROAD SUITE 201, LOVELAND, OH 45140 • 513.683.1236 • SABODESIGNASSOC@SABODA.NET • © COPYRIGHT 2018 SABO DESIGN ASSOCIATES
H:\Jobs in Progress\A\CRI 18055 FF-9168 (Marion Basement)\CRI 18055 FF-9168 (Marion Basement).dwg Thursday, January 11, 2018 4:10:46 PM

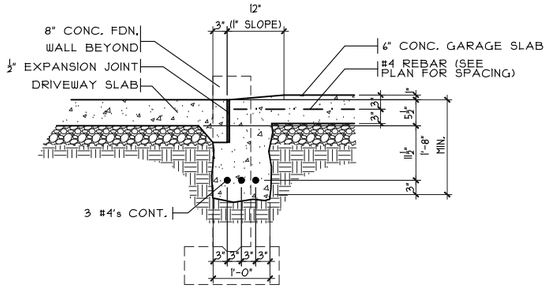

SECTION

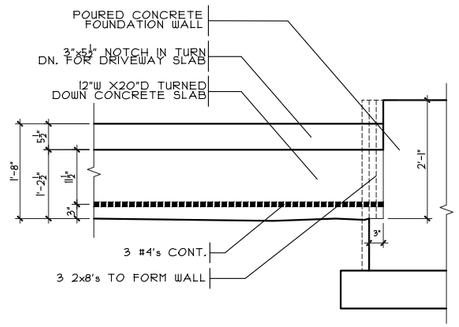

ELEVATION

GARAGE DOOR GRADE BM

SCALE: 3/8" = 1'-0"

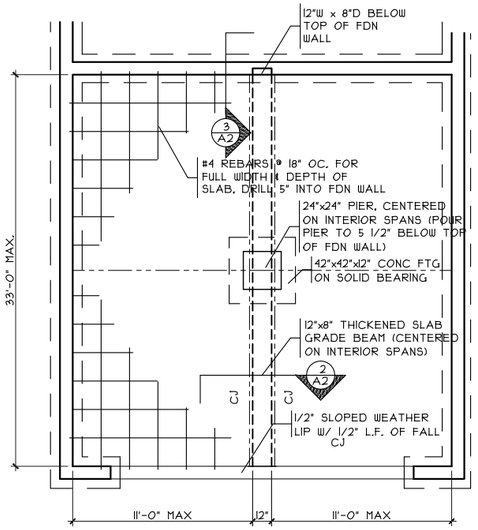

GRADE BM DETAIL

SCALE: 1/8" = 1'-0"

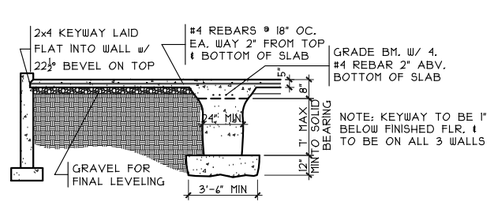

GRADE BM SECTION

2 A2

SCALE: 1/8" = 1'-0"

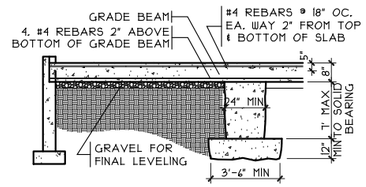

GRADE BM SECTION

3 A2

SCALE: 1/8" = 1'-0"

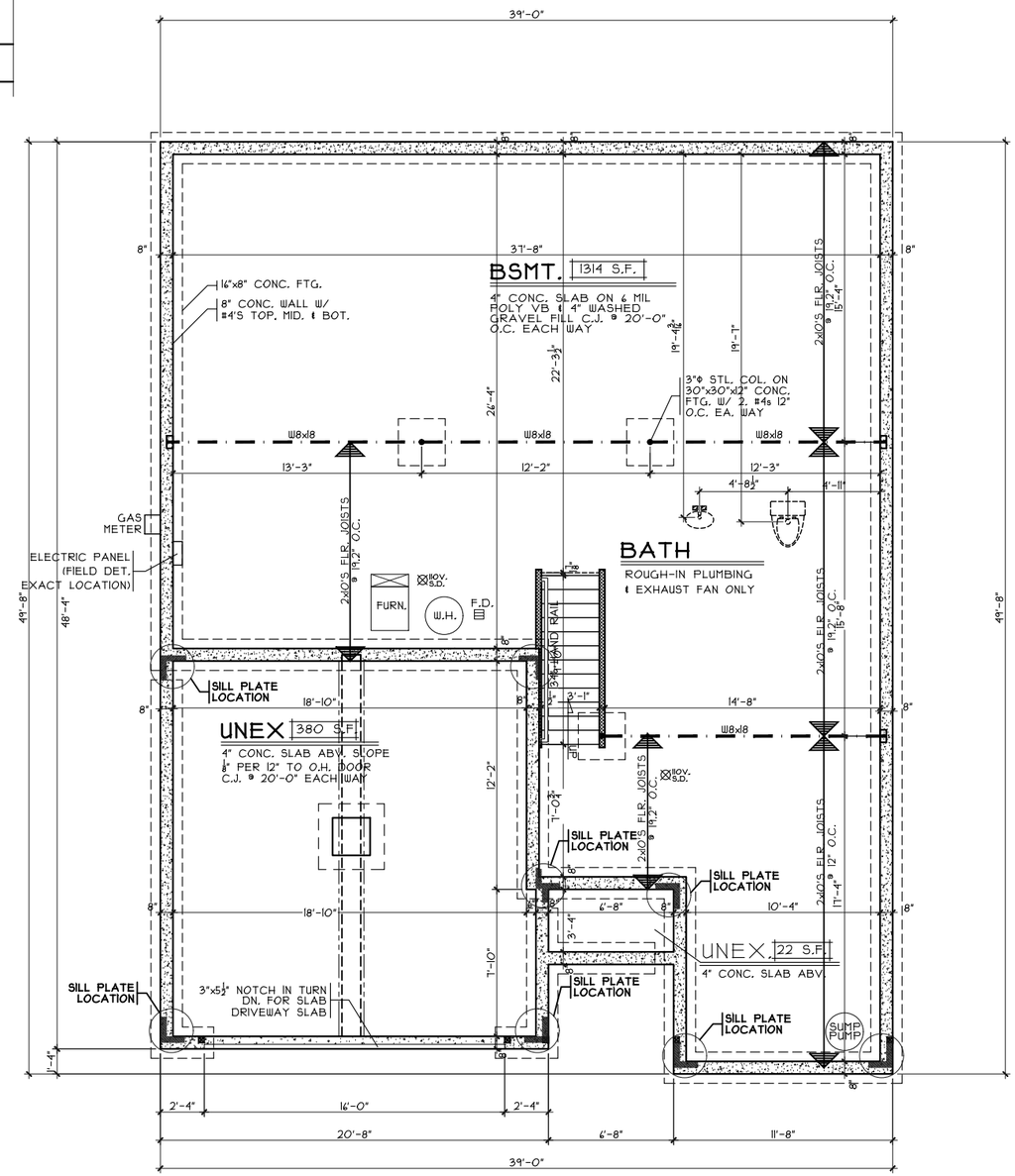

FOUNDATION PLAN

SCALE: 1/8" = 1'-0"

OPTIONS

Issue Dates

Review

Marion Basement - Style - Vinyl

Cristo Homes reserves all property rights in these plans. These plans are not to be reproduced, changed, or copied in any manner. They are not to be given to a third party, either in full or in part, without first receiving written permission from Cristo Homes. In the event these plans are used by a third party, Cristo Homes shall be held harmless.

FF-9168

Proposed Residence:

Highley Residence

5304 River Ridge Dr.

Fairfeild Falls lot# 9168

Fairfield

Butter County

CRISTO HOMES
7594-A Tylers Place Blvd.
West Chester, OH 45069
513.755.0570 www.cristohomes.com

Foundation Plan

Plan: Marion Basement
Date : 5.10.2018
Drawn: AR
Scale : As Noted
Revised: 6/6/2018
Sheet : 3 of 10

A2

CRI17113.DWG • PLANS PREPARED BY SABO DESIGN ASSOCIATES • 550 WARDS CORNER ROAD SUITE 201, LOVELAND, OH 45140 • 513.683.1236 • SABODESIGNASSOC@SABODA.NET • © COPYRIGHT 2018 SABO DESIGN ASSOCIATES
H:\Jobs in Progress\AIA\CRI 18055 FF-9168 (Marion Basement)\CRI 18055 FF-9168 (Marion Basement).dwg Thursday, January 11, 2018 4:10:34 PM

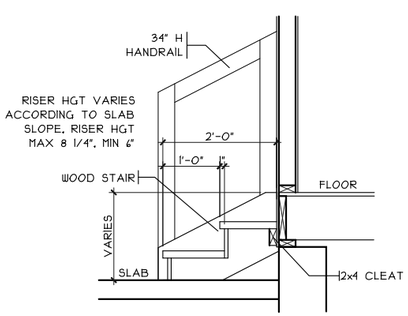

GARAGE STEPS

SCALE: 1/8" = 1'-0"

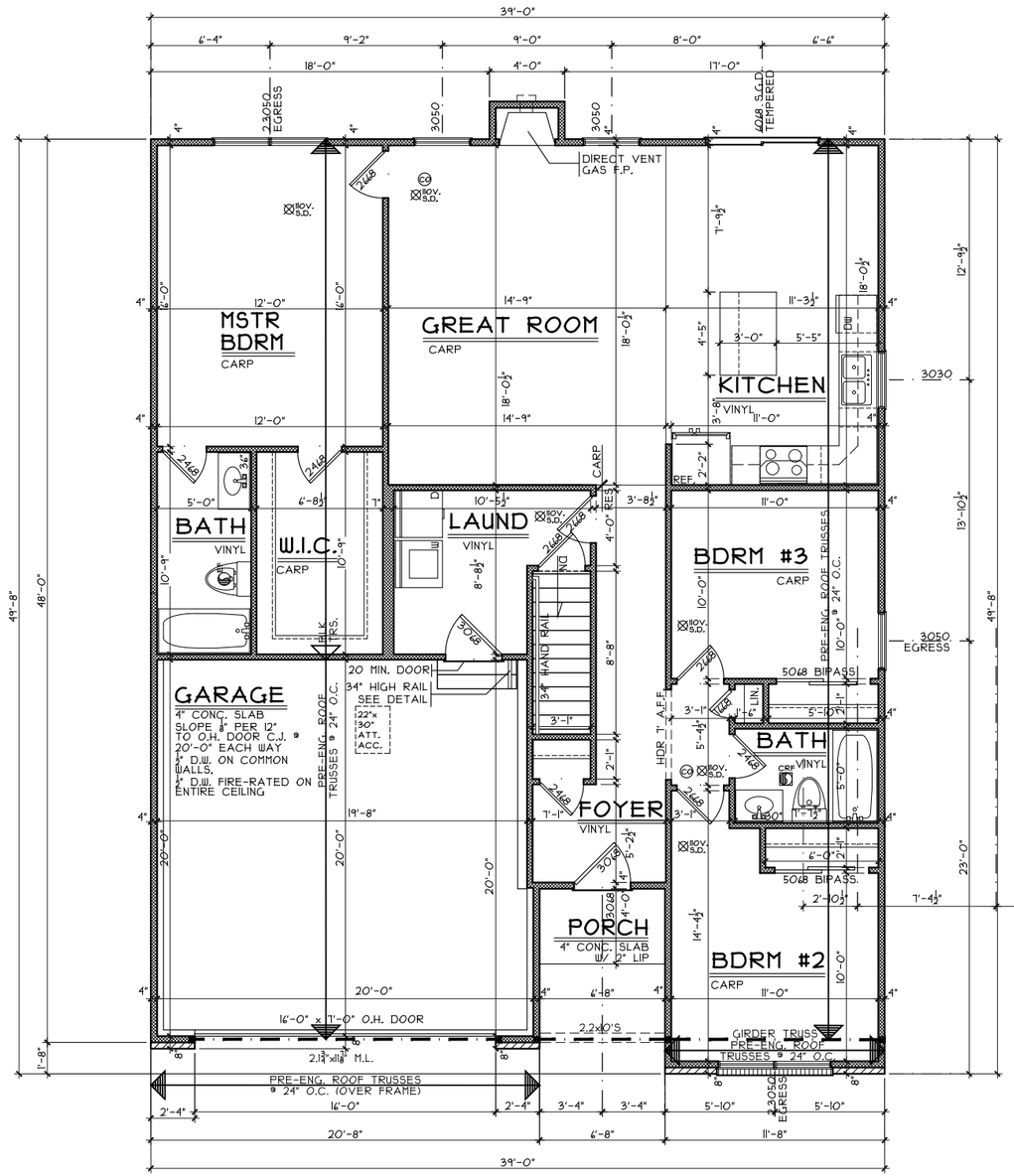

FIRST FLOOR PLAN

SCALE: 1/8" = 1'-0" 1421 S.F

OPTIONS

Issue Dates

Review

Marion Basement - Style - Vinyl

Cristo Homes reserves all property rights in these plans. These plans are not to be reproduced, changed, or copied in any manner. They are not to be given to a third party, either in full or in part, without first receiving written permission from Cristo Homes. In the event these plans are used by a third party, Cristo Homes shall be held harmless.

FF-9168

Proposed Residence:
Highley Residence
5304 River Ridge Dr.
Fairfeild Falls lot# 9168

Fairfeild
Butter County

CRISTO HOMES
7594-A Tylers Place Blvd.
West Chester, OH 45069
513.755.0570 www.cristohomes.com

First Floor Plan

Plan: Marion Basement
Date : 5.10.2018
Drawn: AR
Scale : As Noted
Revised: 6/6/2018
Sheet : 5 of 10

A3