PLOT PLAN
LOT 53 – 0.9568 AC.
THE ESTATES OF KEEVER CREEK, SEC 3
SECTION 23, TOWN 4, RANGE 3
TURTLECREEK TWP, WARREN CO., OHIO
FOR: CRISTO HOMES

15 0 15 30 45

MARKET HOME
283 ELI'S PASS

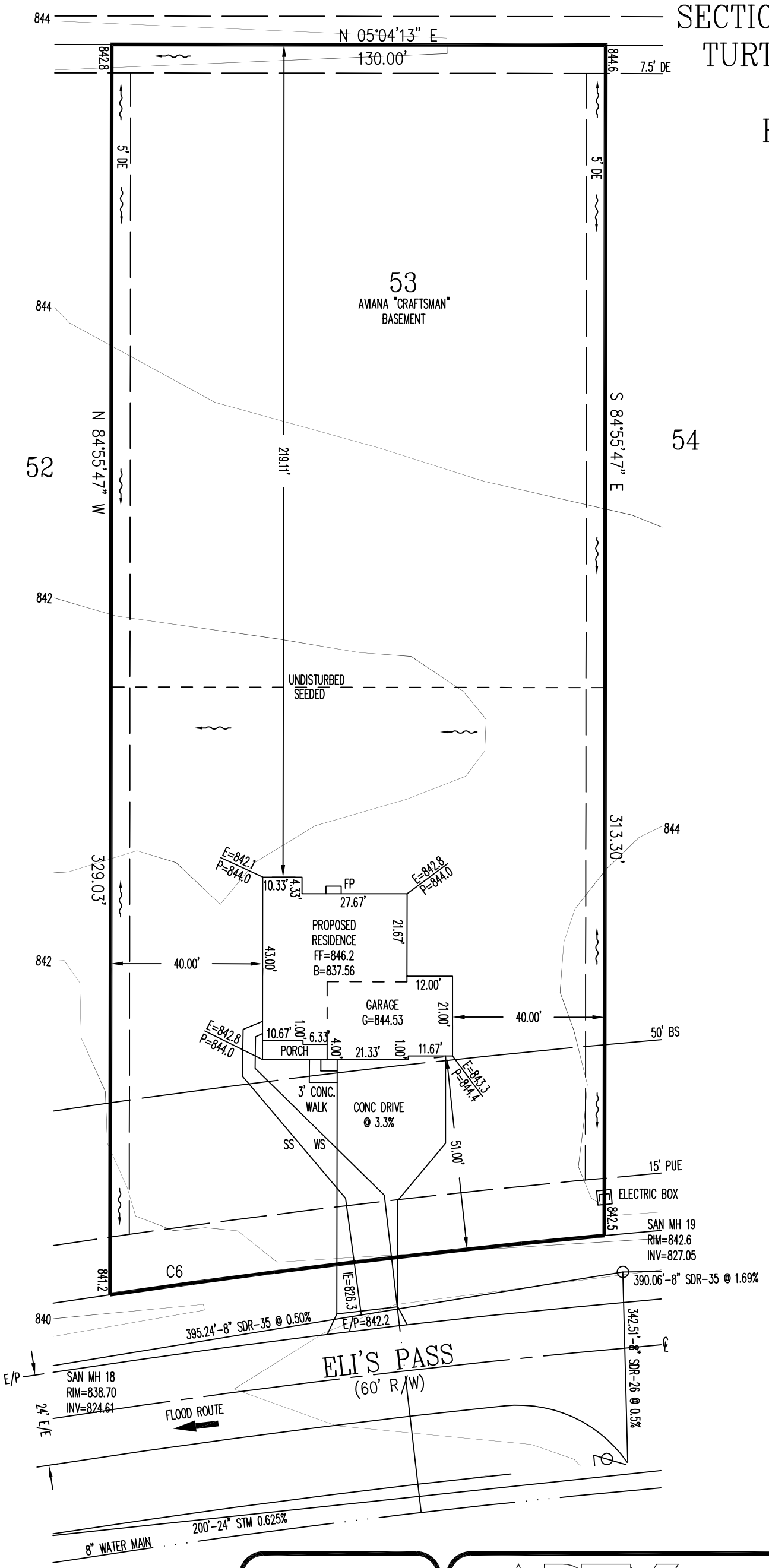

QUANTITIES

TOTAL LOT AREA=41,678 SF
CITY WALK=X
HOUSE WALK=31.0 SF
DRIVE=1434.8 SF
APRON=93.0 SF
PATIO & PORCHES=78.7 SF
DECK=X
SEEDING=18,515 SF
SOD=X
UNSEEDED=21,984 SF

INFORMATION FROM CONSTRUCTION DRAWINGS.

CONTRACTOR IS TO VERIFY LOCATION AND DEPTH OF WATER AND UTILITY SERVICES BEFORE CONSTRUCTION.

ALL ELEVATIONS ARE EXISTING UNLESS SPECIFIED WITH AN "E" FOR EXISTING OR A "P" FOR PROPOSED.

UNLESS F.F.E., M.O.E. OR M.B.E. ARE FIELD VERIFIED BY AN ENGINEERING FIRM, CONTRACTOR TAKES FULL RESPONSIBILITY FOR THE FINISH FLOOR ELEVATION.

A STANDARD FORMULA WAS USED TO DETERMINE FINISH FLOOR GRADE. FINAL FINISH FLOOR ELEVATION IS CONTRACTOR'S RESPONSIBILITY.

Prior to constuction, a geotechnical report shall be obtained by the builder. Apex assumes no responsibility for soil conditions.

BUILDER SHALL PROVIDE POSITIVE DRAINAGE AROUND AND AWAY FROM HOUSES.

APEX ENGINEERING & SURVEYING INC.
ADVISES AGAINST HOLDING THE MINIMUM REQUIRED DISTANCE ON ANY AND ALL SETBACKS, FRONT, REAR, AND SIDES. THE BUILDER ASSUMES ALL RESPONSIBILITIES FOR ANY BUILDING ENCROACHMENTS THAT MAY OCCUR.

C6
R=2530.00'
L=130.96'

SETBACKS
FRONT=50'
REAR=35'
SIDE=5' / 20' TOTAL

STATE OF OHIO
KENNETH R. COMBS
7311
REGISTERED
PROFESSIONAL SURVEYOR

TOPOGRAPHY FROM CONSTRUCTION PLANS, DATED JUNE, 2016 AND MAY NOT REFLECT CURRENT CONDITIONS.

SCALE: 1"=30'
DATE: 11-09-18
DRAWN: JLL
DESIGNED:
CHECKED: KRC

APEX ENGINEERING & SURVEYING, INC.
1068 N. UNIVERSITY BLVD MIDDLETOWN, OHIO 45042
PH.-(513) 424-5202 OR (513) 932-8991 FAX - (513) 424-6202

REVISIONS:
1.
2.
3.
4.

PROJECT: KEEVERCREEK
DRAWING: 182000PA

SHEET 1 OF 1

CRI18126.DWG • PLANS PREPARED BY SABO DESIGN ASSOCIATES • 550 WARDS CORNER ROAD SUITE 201, LOVELAND, OH 45140 • 513.683.1236 • SABODESIGNASSOC@SABODA.NET • © COPYRIGHT 2018 SABO DESIGN ASSOCIATES
H:\Archives\Cristo\CRI 11049 Aviana\CONTRACTS\CRI 18126 KC-53 Aviana\CRI 18126 - KC-53 - Aviana.dwg Monday, December 03, 2018 12:41:55 PM

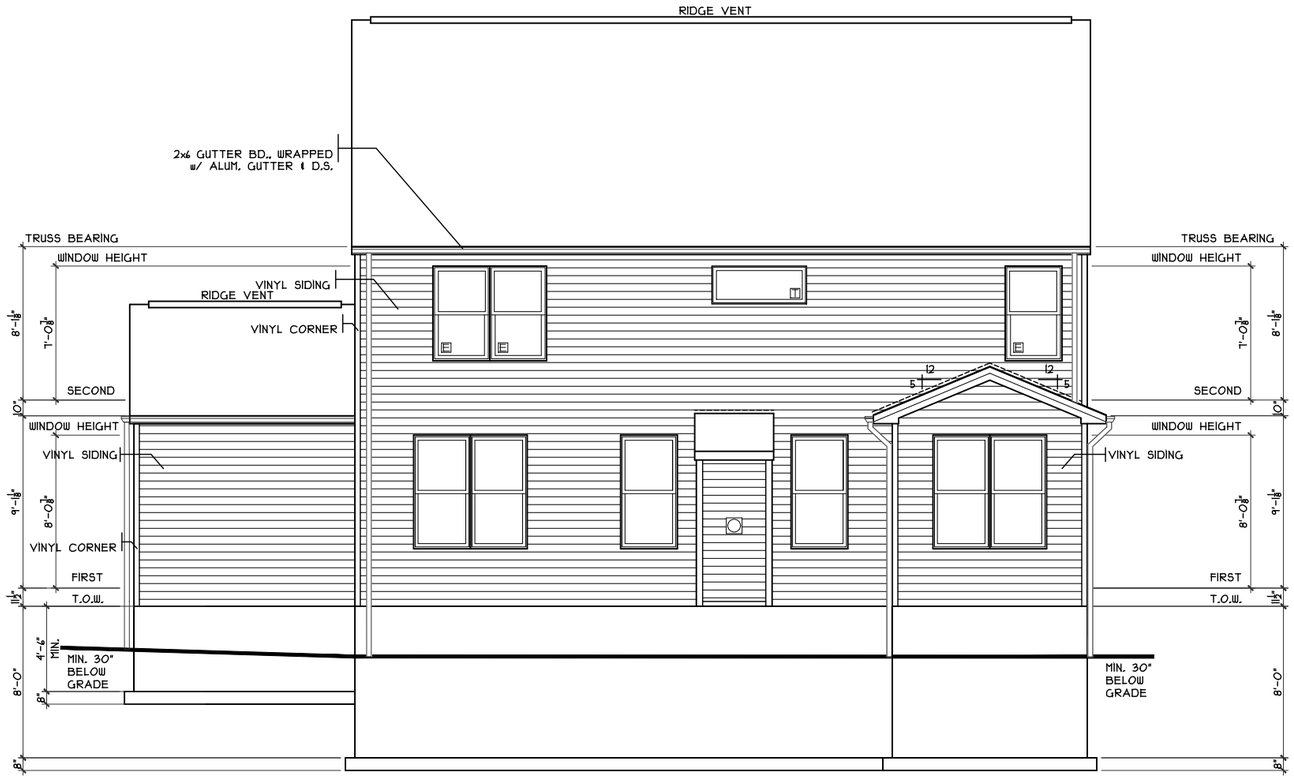

REAR ELEVATION

SCALE: 1/8" = 1'-0" CRAFTSMAN

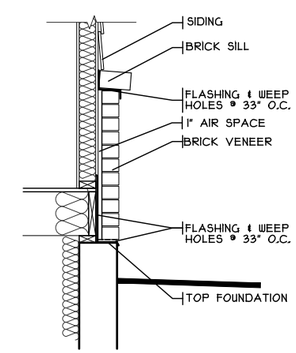

BRICK BASE DETAIL

SCALE: 1/8" = 1'-0"

SHEET INDEX	
SHT#	DESCRIPTION
A1	Front & Rear Elevations
A1a	Side Elevations
A2	Foundation Plan
A3	First Floor Plan
A4	Second Floor Plan
A5	Typical Wall Section / Stair Section
A6	Portal Framing Detail / Fireplace Det.
A7	Alum. Wrap Framing Details
G1	General Notes
E1	Electric Plan
E2	Electric Plan
S1	1st Floor Joist Layout
S2	2nd Floor Joist Layout / Roof Plan

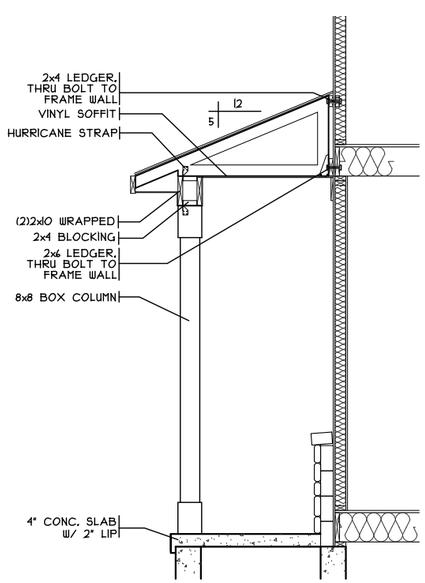

PORCH DETAIL

SCALE: 1/4" = 1'-0"

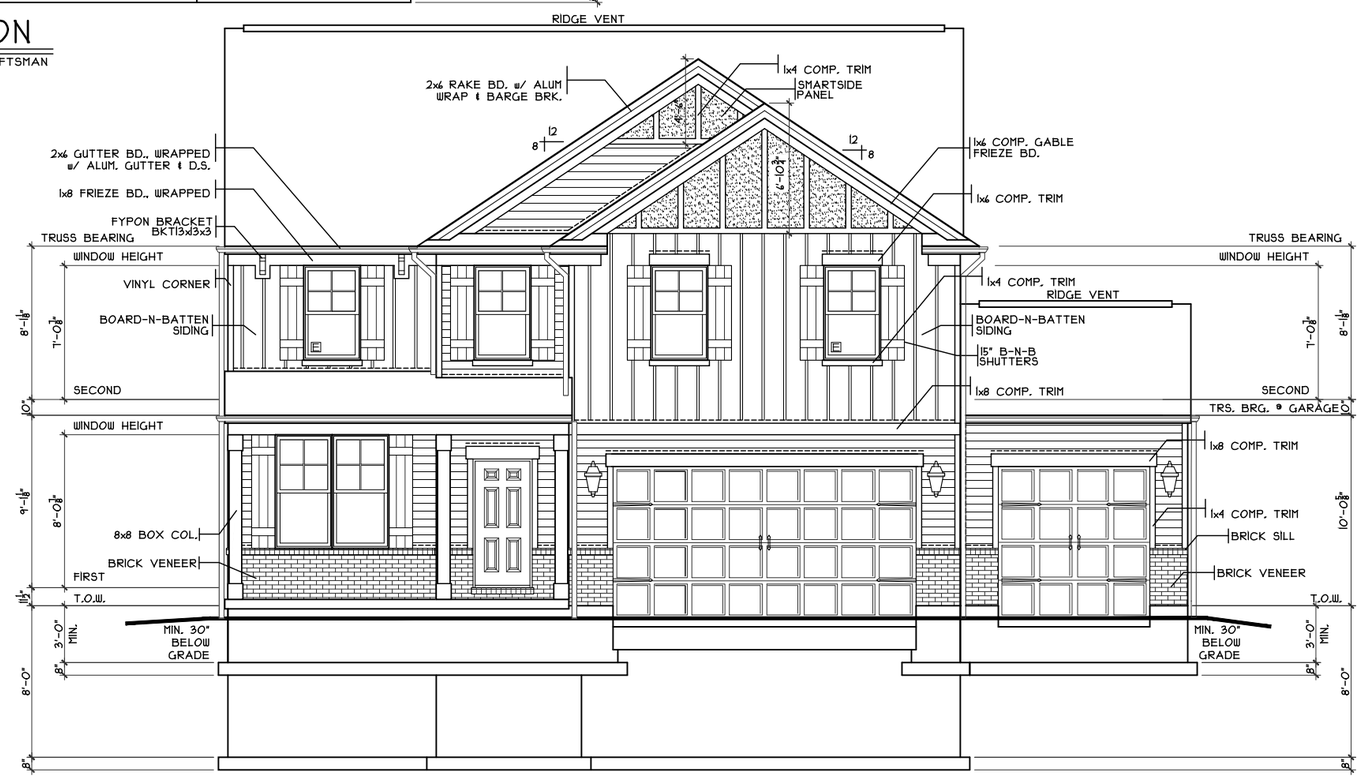

FRONT ELEVATION

SCALE: 1/8" = 1'-0" CRAFTSMAN

2S2747B4 PLAN INFO	
4	BDRMS
2.5	BATHS
3	CAR GARAGE
4"	1ST FLR. CLG.
SQUARE FOOTAGE	
TOTAL	2747
MAIN	1210
UPPER	1537
LOWER(FINISH)	N/A
LOWER(SLAB)	1059
GAR. (SLAB)	626

KEY PLAN

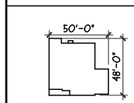

OPTIONS

Issue Dates

Review #1: 11-12-18
Review #2: 12-3-18

Aviana - Craftsman - Vinyl

Cristo Homes reserves all property rights in these plans. These plans are not to be reproduced, changed, or copied in any manner. They are not to be given to a third party, either in full or in part, without first receiving written permission from Cristo Homes. In the event these plans are used by a third party, Cristo Homes shall be held harmless.

KC-53

Proposed Residence:
Market Home
Estates of Keever Creek
283 Ell's Pass
Turtlecreek
Warren County

CRISTO HOMES
7594-A Tylers Place Blvd.
West Chester, OH 45069
513.755.0570 www.cristohomes.com

Elevations - Craftsman

Plan : Aviana
Date : 10/30/18
Drawn: AG
Scale : As Noted
Revised: 12/3/18
Sheet : 1 of 13

A1

CRI18126.DWG • PLANS PREPARED BY SABO DESIGN ASSOCIATES • 550 WARDS CORNER ROAD SUITE 201, LOVELAND, OH 45140 • 513.683.1236 • SABODESIGNASSOC@SABODA.NET • © COPYRIGHT 2018 SABO DESIGN ASSOCIATES

H:\Archives\Cristo\CRI 1104 Aviana\CONTRACTS\CRI 18126 KC-53 Aviana\CRI 18126 - KC-53 - Aviana.dwg Monday, December 03, 2018 12:41:55 PM

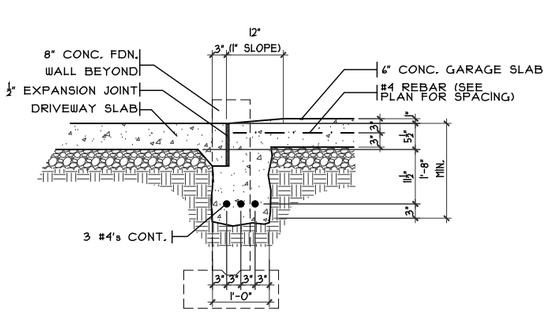

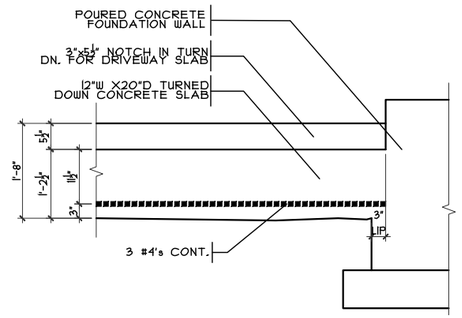

GARAGE DOOR GRADE BM

SCALE: 3/8" = 1'-0"

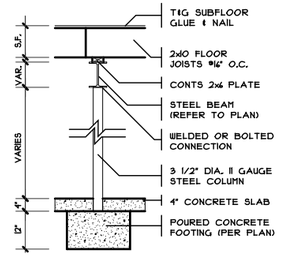

COLUMN DETAIL

SCALE: 1/4" = 1'-0"

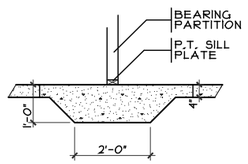

THICKENED SLAB

SCALE: 1/4" = 1'-0"

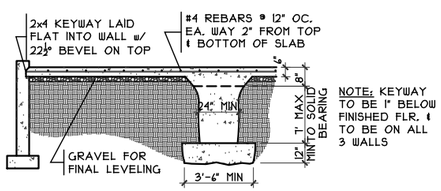

GRADE BM SECTION

2 / A2

SCALE: 1/8" = 1'-0"

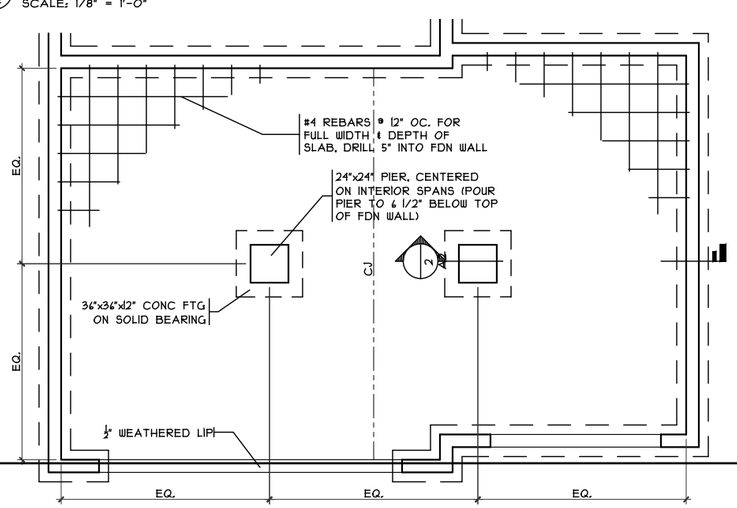

GRADE BM DETAIL

SCALE: 1/8" = 1'-0"

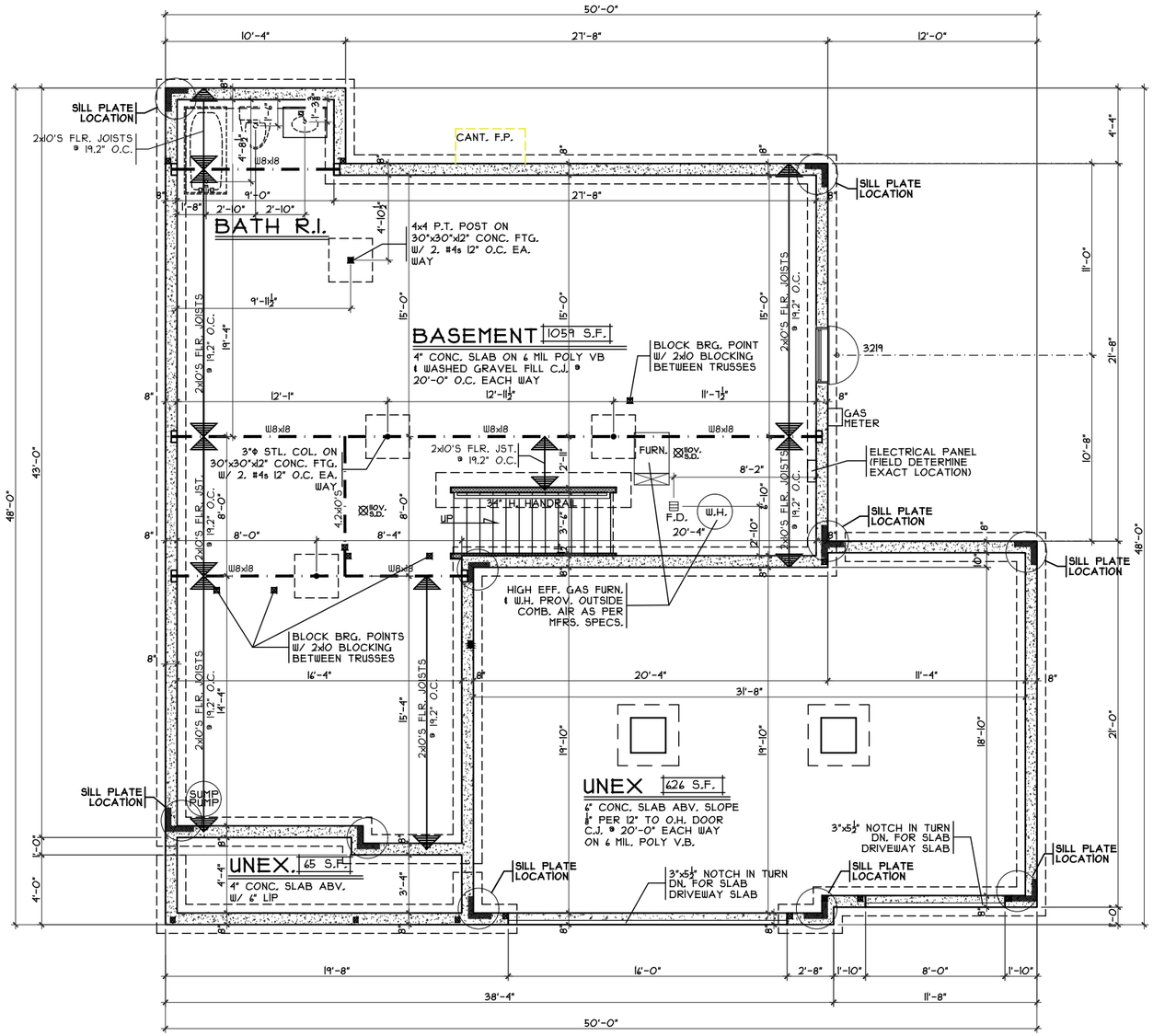

FOUNDATION PLAN

SCALE: 1/8" = 1'-0"

Issue Dates

Review #1: 11-12-18
Review #2: 12-3-18

Aviana - Craftsman - Vinyl

Cristo Homes reserves all property rights in these plans. These plans are not to be reproduced, changed, or copied in any manner. They are not to be given to a third party, either in full or in part, without first receiving written permission from Cristo Homes. In the event these plans are used by a third party, Cristo Homes shall be held harmless.

KC-53

Proposed Residence:

Market Home
Estates of Keever Creek
283 Ell's Pass

Turtlecreek
Warren County

CRISTO HOMES
7594-A Tylers Place Blvd.
West Chester, OH 45069
513.755.0570 www.cristohomes.com

Foundation Plan

Plan : Aviana
Date : 10/30/18
Drawn: AG
Scale : As Noted
Revised: 12/3/18
Sheet :3 of 13

A2

CRI18126.DWG • PLANS PREPARED BY SABO DESIGN ASSOCIATES • 550 WARDS CORNER ROAD SUITE 201, LOVELAND, OH 45140 • 513.683.1236 • SABODESIGNASSOC@SABODA.NET • © COPYRIGHT 2018 SABO DESIGN ASSOCIATES
H:\Archives\Cristo\CRI 11049 Aviana\CONTRACTS\CRI 18126 KC-53 Aviana\CRI 18126 - KC-53 - Aviana.dwg Monday, December 03, 2018 12:41:55 PM

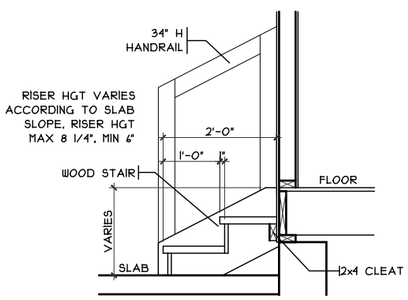

GARAGE HANDRAIL DET.

SCALE: 3/8" = 1'-0"

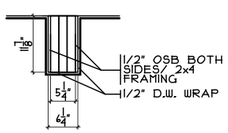

BOX BEAM DETAIL

SCALE: 3/8" = 1'-0"

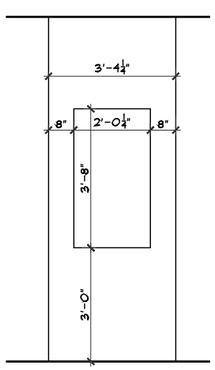

NICHE DETAIL

SCALE: 1/4" = 1'-0"

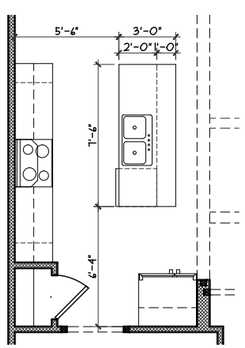

ISLAND DIMS.

SCALE: 1/8" = 1'-0"

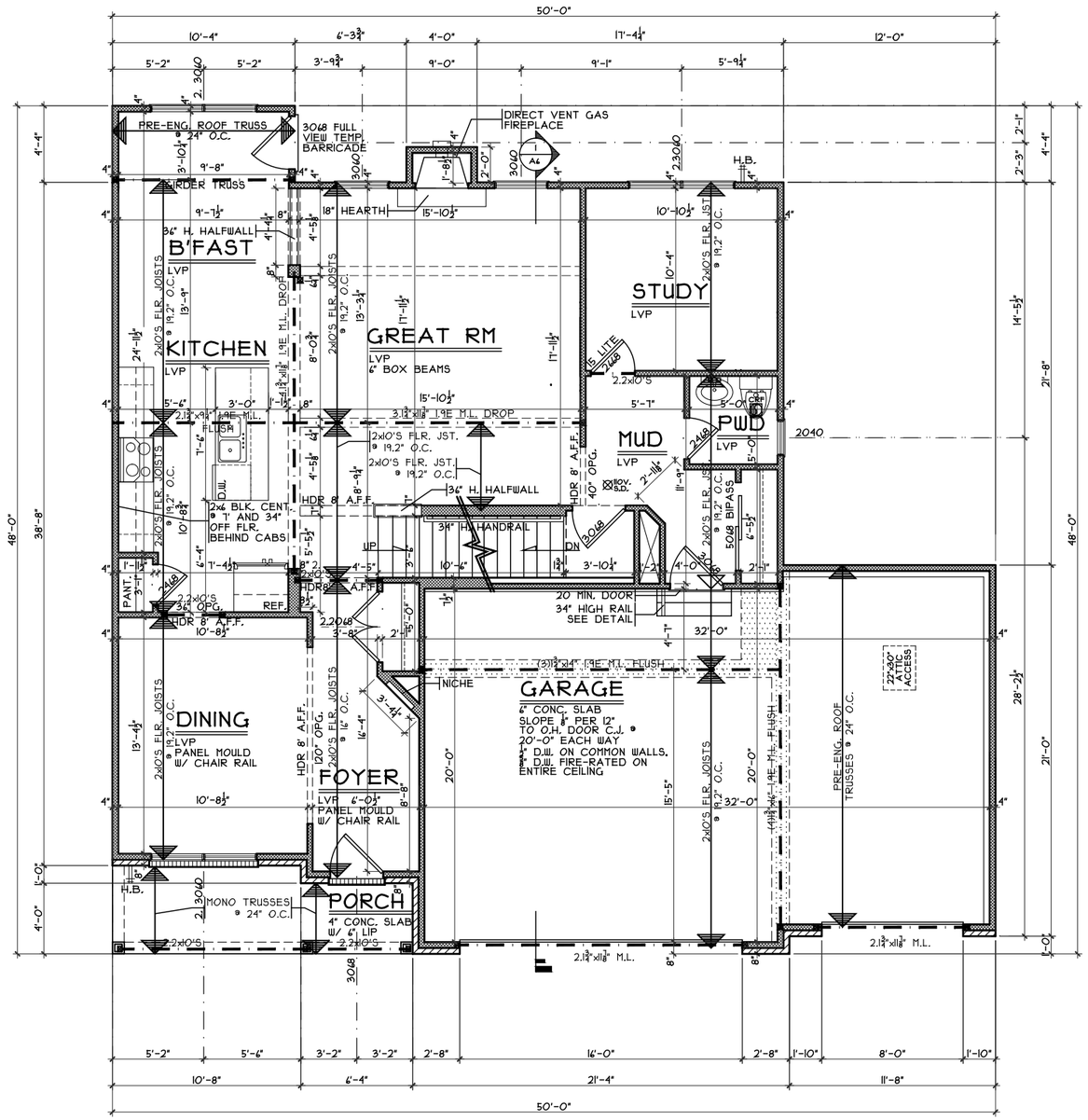

FIRST FLOOR PLAN

SCALE: 1/8" = 1'-0" 1210 S.F

Issue Dates

Review #1: 11-12-18
Review #2: 12-3-18

Aviana - Craftsman - Vinyl

Cristo Homes reserves all property rights in these plans. These plans are not to be reproduced, changed, or copied in any manner. They are not to be given to a third party, either in full or in part, without first receiving written permission from Cristo Homes. In the event these plans are used by a third party, Cristo Homes shall be held harmless.

Turtlecreek
Warren County

KC-53
Proposed Residence:
Market Home
Estates of Keever Creek
283 Ell's Pass

CRISTO HOMES
7594-A Tylers Place Blvd.
West Chester, OH 45069
513.755.0570 www.cristohomes.com

First Floor Plan

Plan : Aviana
Date : 10/30/18
Drawn: AG
Scale : As Noted
Revised: 12/3/18
Sheet :4 of 13

A3

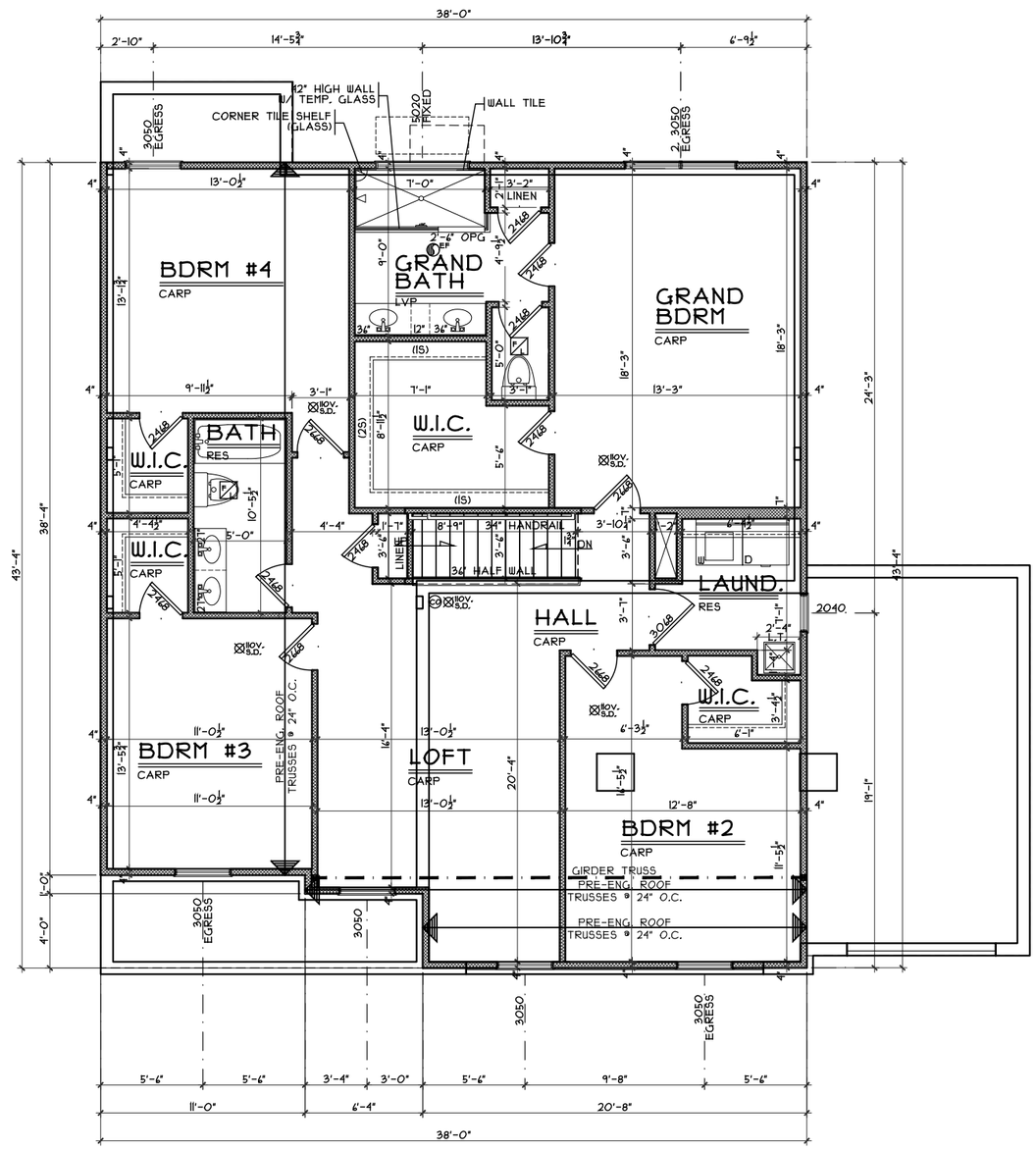

SECOND FLOOR PLAN

SCALE: 1/8" = 1'-0" 1537 S.F

Second Floor Plan - Traditional

5

A4