15 0 15 30 45

GATTERMEYER RESIDENCE
111 HANFORD LANE

SETBACKS:
FRONT YARD=40'
REAR YARD=25'
SIDE YARD=10' MIN/20' TOTAL
20' BETWEEN BUILDINGS

AMERICAN SWEETGUM

LOT COVERAGE=27.7%

M.R.O.E.=687.7

QUANTITIES

TOTAL LOT AREA	8,125	sq. ft.
CITY WALK	245	sq. ft.
HOUSE WALK	49	sq. ft.
DRIVE	752	sq. ft.
APRON	93	sq. ft.
PATIO AND PORCHES	30	sq. ft.
DECK	–	sq. ft.
SEEDING AREA	6141	sq. ft.

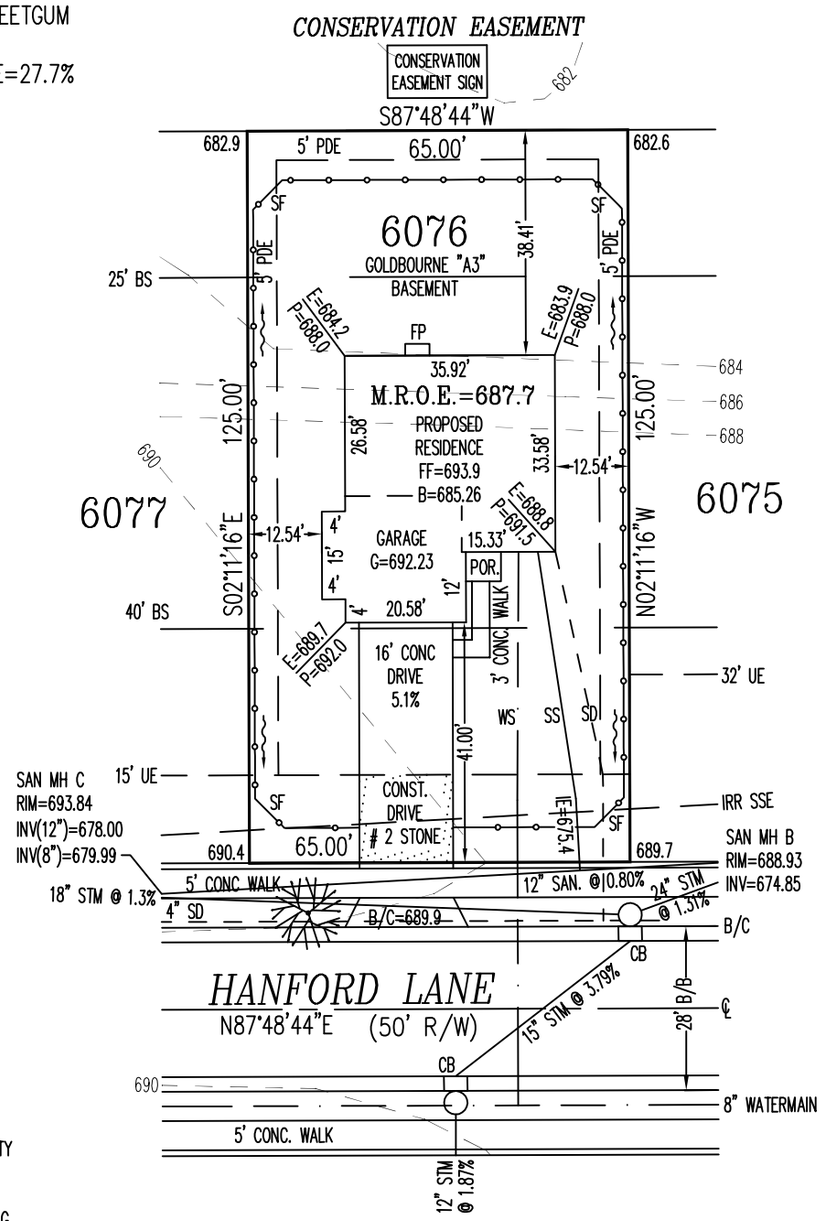

STATE OF OHIO
KENNETH R.
COMBS
7311
REGISTERED
PROFESSIONAL SURVEYOR

APEX IS NOT RESPONSIBLE FOR SOIL CONDITIONS OR GROUND WATER CONDITIONS.

GRADE / SPOT ELEVATIONS, FOUNDATION ELEVATIONS ARE ONLY RECOMMENDATIONS AND MAY VARY DUE TO SITE CONDITIONS.

INFORMATION FROM CONSTRUCTION DRAWINGS.

CONTRACTOR IS TO VERIFY LOCATION AND DEPTH OF WATER AND UTILITY SERVICES BEFORE CONSTRUCTION.

UNLESS F.F.E., M.O.E. OR M.B.E. ARE FIELD VERIFIED BY AN ENGINEERING FIRM, CONTRACTOR TAKES FULL RESPONSIBILITY FOR THE FINISH FLOOR ELEVATION.

A STANDARD FORMULA WAS USED TO DETERMINE FINISH FLOOR GRADE. FINAL FINISH FLOOR ELEVATION IS CONTRACTOR'S RESPONSIBILITY.

ALL ELEVATIONS ARE EXISTING UNLESS SPECIFIED WITH AN "E" FOR EXISTING OR A "P" FOR PROPOSED.

BUILDER SHALL PROVIDE POSITIVE DRAINAGE AROUND AND AWAY FROM HOUSES.

APEX ENGINEERING & SURVEYING INC.
ADVISES AGAINST HOLDING THE MINIMUM REQUIRED DISTANCE ON ANY AND ALL SETBACKS, FRONT, REAR, AND SIDES. THE BUILDER ASSUMES ALL RESPONSIBILITIES FOR ANY BUILDING ENCROACHMENTS THAT MAY OCCUR.

TOPOGRAPHY FROM CONSTRUCTION PLANS. DATED AUG. 2018.
MAY NOT REFLECT CURRENT CONDITIONS.

CONSERVATION EASEMENT SIGN AND TREE LOCATION (SCANNED AND APPROX. LOCATION)

CONSERVATION EASEMENT BEHIND LOT (PER CITY OF MONROE)

HOME BUILDER IS REQUIRED TO SWEEP STREET ADJACENT TO SITE DAILY ALSO IS RESPONSIBLE FOR MAINTAINING INLET PROTECTION OF CURB INLET IN FRONT OF SITE DURING CONMSTRUCTION OF HOME.

PROJECT No. TRAILSTODHUNTER DWG No. 201883PA

DATE: 08/19/2020	CRISTO HOMES	EXHIBIT

PLOT PLAN
LOT 6076 (8,125 SF) 0.1865 AC.
THE TRAILS OF TODHUNTER, SEC. ONE, BLK. A
CITY OF MONROE
BUTLER COUNTY, OHIO

SCALE: 1"=30'	DRAWN: JLS	CHECKED: KC

APEX ENGINEERING & SURVEYING, INC.
1068 NORTH UNIVERSITY BLVD. MIDDLETOWN, OHIO 45042
PH.-(513) 424-5202 OR (513) 932-8991 FAX - (513) 424-6202

CR120173.DWG • PLANS PREPARED BY SABO DESIGN ASSOCIATES • 550 WARDS CORNER ROAD SUITE 201, LOVELAND, OH 45140 • 513.683.1236 • SABODESIGNASSOC@SABODA.NET • © COPYRIGHT 2020 SABO DESIGN ASSOCIATES

H:\Archives\Cristo\CRI 18150 Goldbourne\CONTRACTS\CRI 20173 TH-6076 (Goldbourne)\CRI20173 TH-6076 (Goldbourne).dwg Tuesday, August 27, 2019 8:04:08 AM

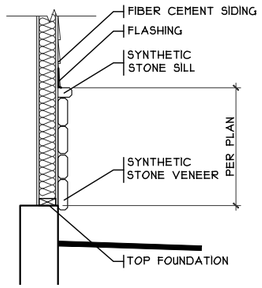

3/A1 STONE BASE DETAIL
SCALE: 1/8" = 1'-0"

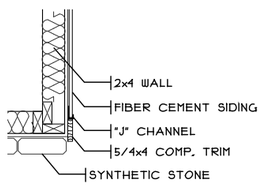

STONE CORNER
SCALE: 3/8" = 1'-0"

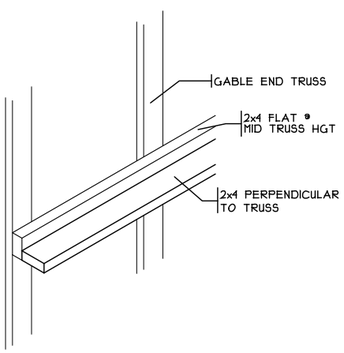

STIFF BACK DETAIL
SCALE: 3/8" = 1'-0"

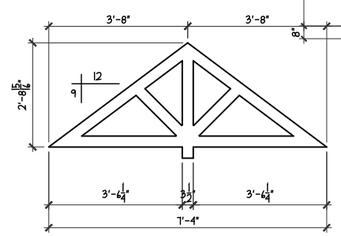

2/A1 GABLE PEDIMENT DETAIL
SCALE: 3/8" = 1'-0"

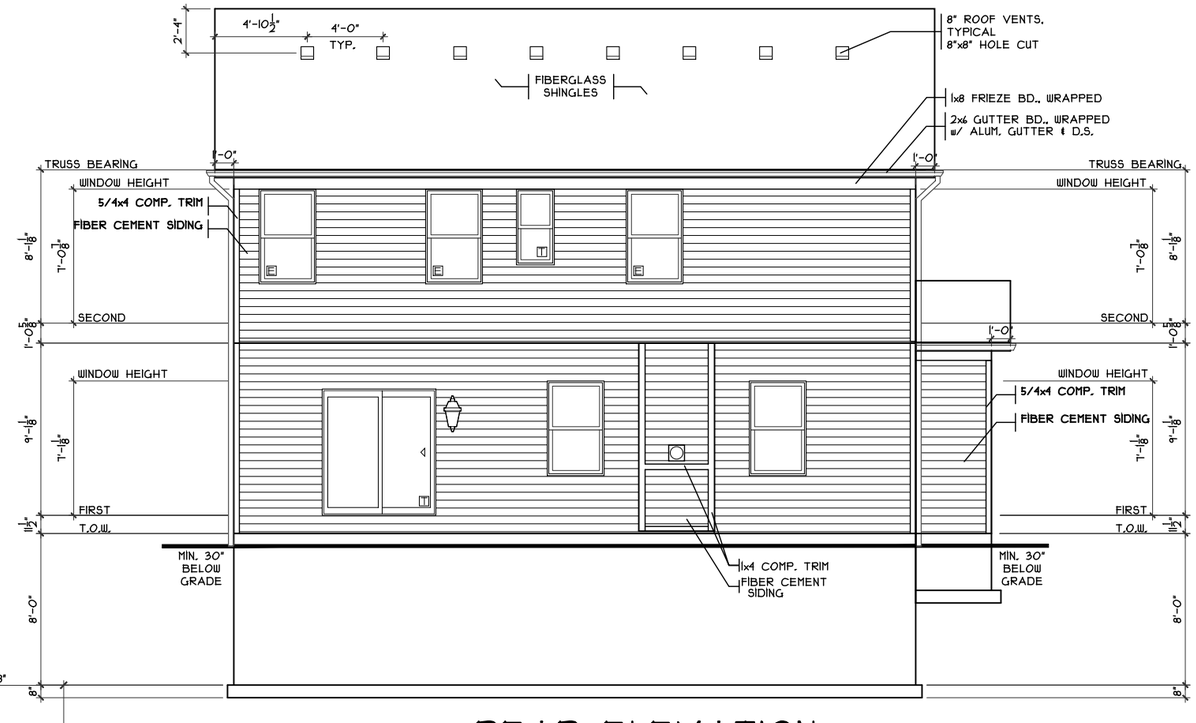

REAR ELEVATION
SCALE: 1/8" = 1'-0"

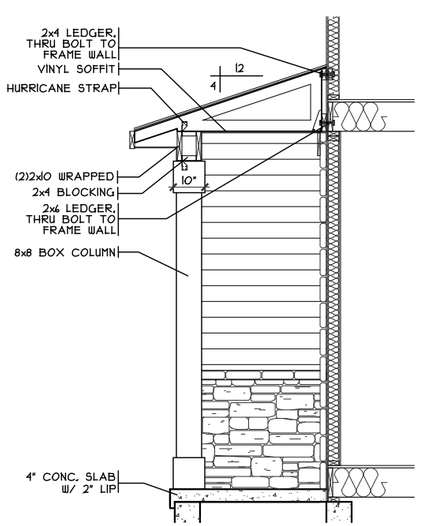

FRONT PORCH DETAIL
SCALE: 1/4" = 1'-0"

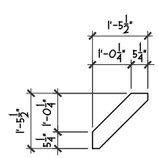

BRACKET DETAIL
SCALE: 1/4" = 1'-0"

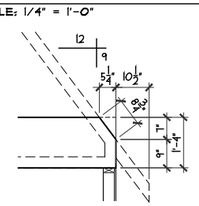

1/A1 M.L. CUT DETAIL
SCALE: 3/4" = 1'-0"

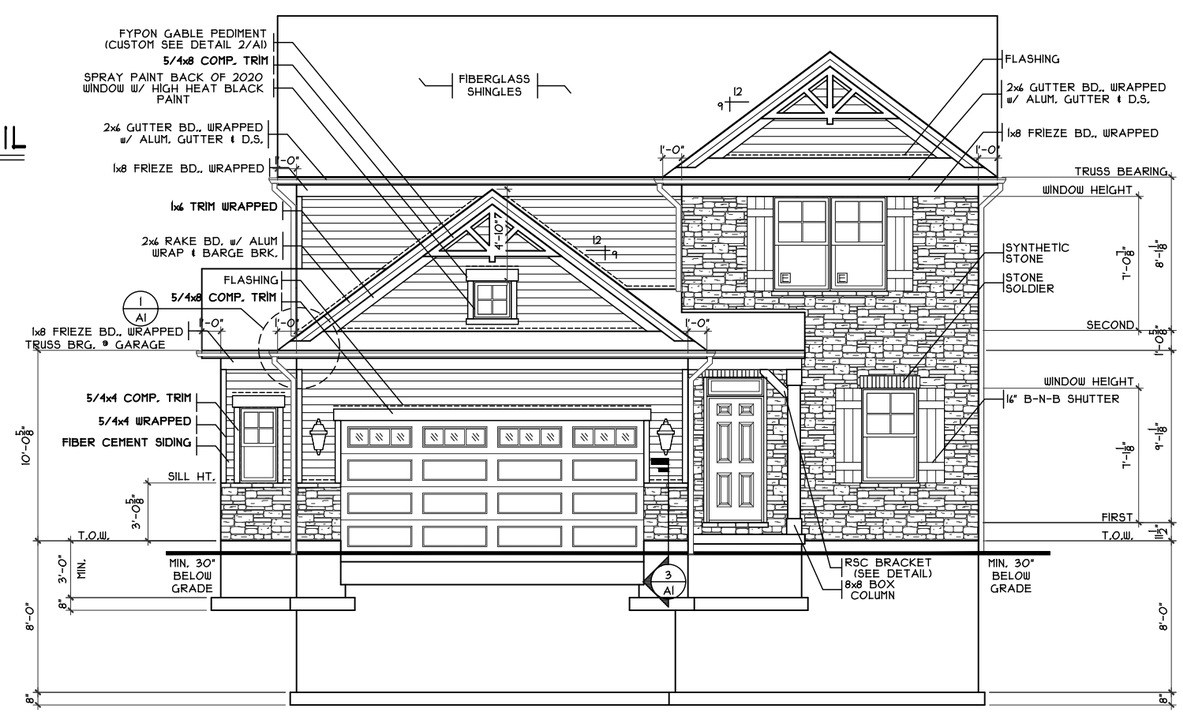

FRONT ELEVATION
SCALE: 1/8" = 1'-0"

SHEET INDEX

SHT#	DESCRIPTION
A1	Front and Rear Elevations
A1a	Left and Right Elevations
A2	Foundation Plan
A3	First Floor Plan
A4	Second Floor Plan
A5	Typical Wall Sections/Stair Section
A6	Typical Framing Details
G1	General Notes

NOTE:
PLANS PRINTED ON 24x36 SHEETS TO BE SCALABLE AT FULL SCALE, 1/4" = 1'-0"
PLANS PRINTED ON 11x17 SHEETS TO BE SCALABLE AT HALF SCALE, 1/8" = 1'-0"

PLAN INFO.
2S2214B4

4 BDRMS
2.5 BATH
2 CAR GARAGE
9' 1ST FLR. CLG.

SQUARE FOOTAGE

TOTAL	2214
FIRST	1020
SECOND	1194
LOW. LEV. FIN.	N/A
LOWER (SLAB)	924
GAR. (SLAB)	458

KEY PLAN

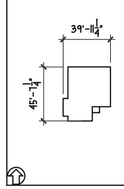

OPTIONS

Issue Dates

Review #1 - 5.16.2019

Goldbourne - A3 - Comp.

Cristo Homes reserves all property rights in these plans. These plans are not to be reproduced, changed, or copied in any manner. They are not to be given to a third party, either in full or in part, without first receiving written permission from Cristo Homes. In the event these plans are used by a third party, Cristo Homes shall be held harmless.

TH-6076

Proposed Residence:
Gattermeyer Residence
111 Hanford Lane
Trails of Todhunter Lot #6076
Monroe
Butler County

CRISTO HOMES
7594-A Tylers Place Blvd.
West Chester, OH 45069
513.755.0570 www.cristohomes.com

Front & Rear Elevations

Plan: Goldbourne
Date : 8.7.2020
Drawn: KMA
Scale : As Noted
Revised: 8.19.2020
Sheet : 1 of 12

A1

CRI20173.DWG • PLANS PREPARED BY SABO DESIGN ASSOCIATES • 550 WARDS CORNER ROAD SUITE 201, LOVELAND, OH 45140 • 513.683.1236 • SABODESIGNASSOC@SABODA.NET • © COPYRIGHT 2020 SABO DESIGN ASSOCIATES

H:\Archives\Cristo\CRI 18150 Goldbourne\CONTRACTS\CRI 20173 TH-407k (Goldbourne)\CRI20173 TH-407k (Goldbourne)\.dwg Tuesday, August 27, 2019 8:04:08 AM

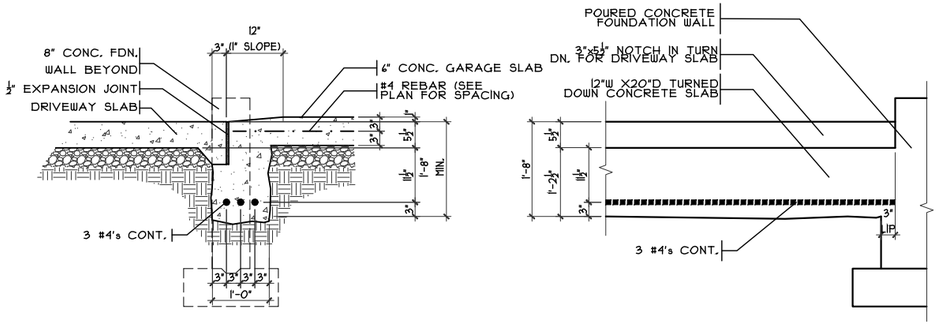

GARAGE DOOR GRADE BM

SCALE: 3/8" = 1'-0"

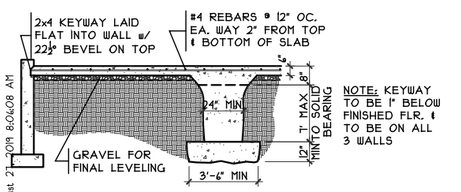

GRADE BM SECTION

2 A2

SCALE: 1/8" = 1'-0"

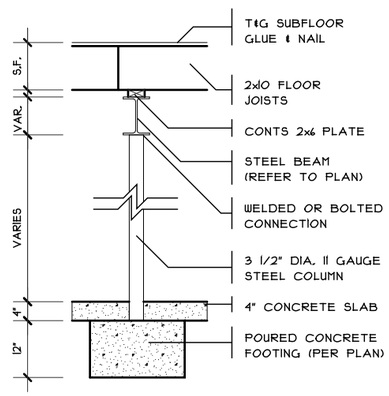

COLUMN DETAIL

SCALE: 1/4" = 1'-0"

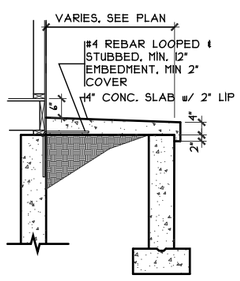

PORCH DETAIL

SCALE: 1/4" = 1'-0"

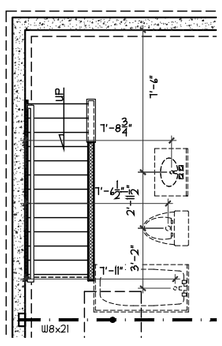

PLUMBING DIMS

SCALE: 1/4" = 1'-0"

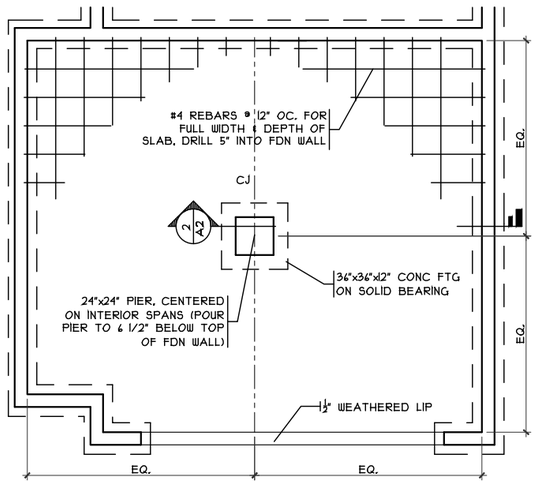

GRADE BM DETAIL

SCALE: 1/8" = 1'-0"

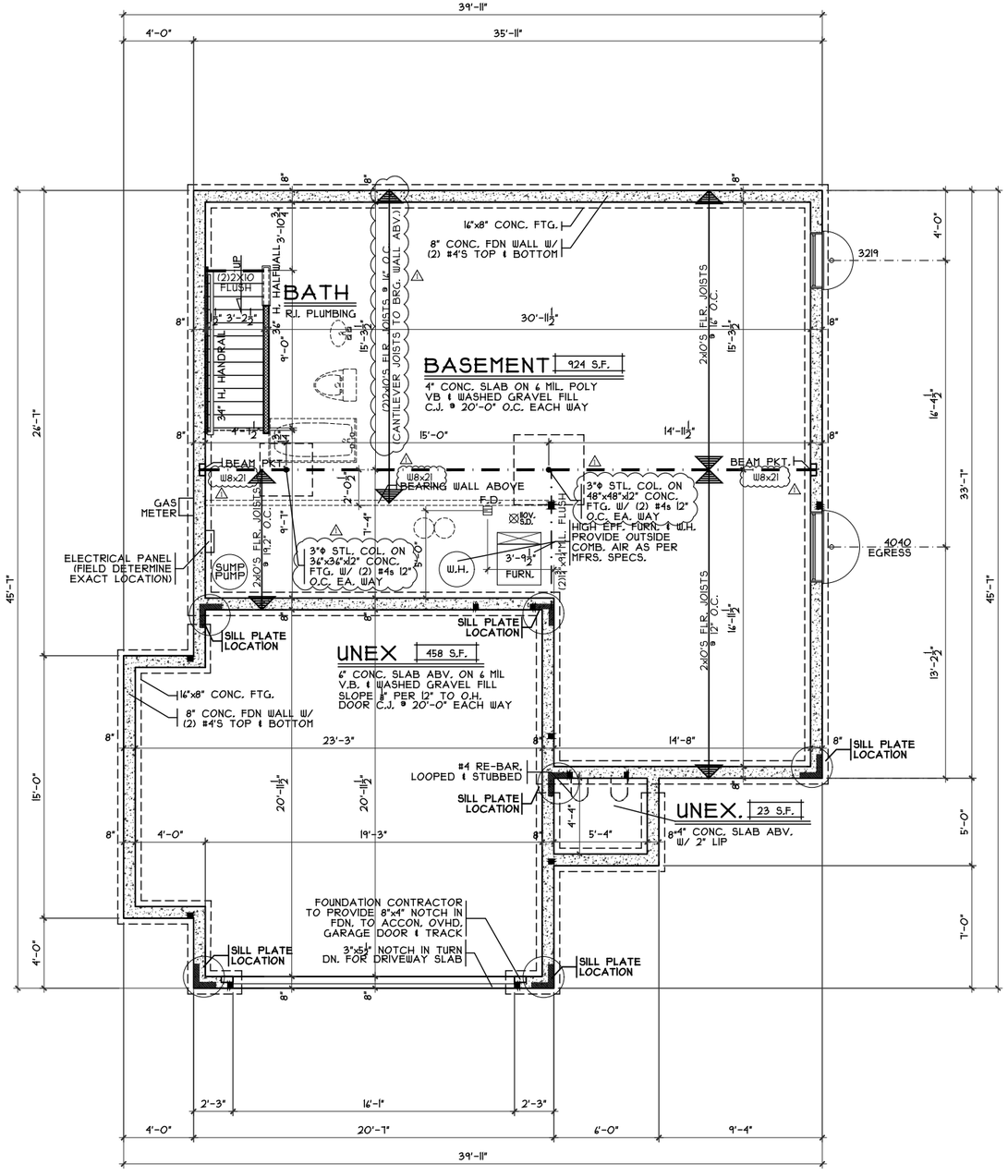

FOUNDATION PLAN

SCALE: 1/8" = 1'-0"

OPTIONS

Goldbourne - A3 - Comp.

Issue Dates

Review #1 - 5.16.2019

Cristo Homes reserves all property rights in these plans. These plans are not to be reproduced, changed, or copied in any manner. They are not to be given to a third party, either in full or in part, without first receiving written permission from Cristo Homes. In the event these plans are used by a third party, Cristo Homes shall be held harmless.

TH-6076

Proposed Residence:

Gattermeyer Residence

111 Hanford Lane

Trails of Todhunter Lot #6076

Monroe

Butler County

CRISTO HOMES
7394-A Tylers Place Blvd.
West Chester, OH 45069
513.755.0570 www.cristohomes.com

Foundation Plan

Plan: Goldbourne
Date : 8.7.2020
Drawn: KMA
Scale : As Noted
Revised: 8.19.2020
Sheet : 3 of 12

A2

CR120173.DWG • PLANS PREPARED BY SABO DESIGN ASSOCIATES • 550 WARDS CORNER ROAD SUITE 201, LOVELAND, OH 45140 • 513.683.1236 • SABODESIGNASSOC@SABODA.NET • © COPYRIGHT 2020 SABO DESIGN ASSOCIATES
H:\Archives\Cristo\CRI 18150 Goldbourne\CONTRACTS\CRI 20173 TH-4076 (Goldbourne)\CRI20173 TH-4076 (Goldbourne).dwg Tuesday, August 27, 2019 8:04:08 AM

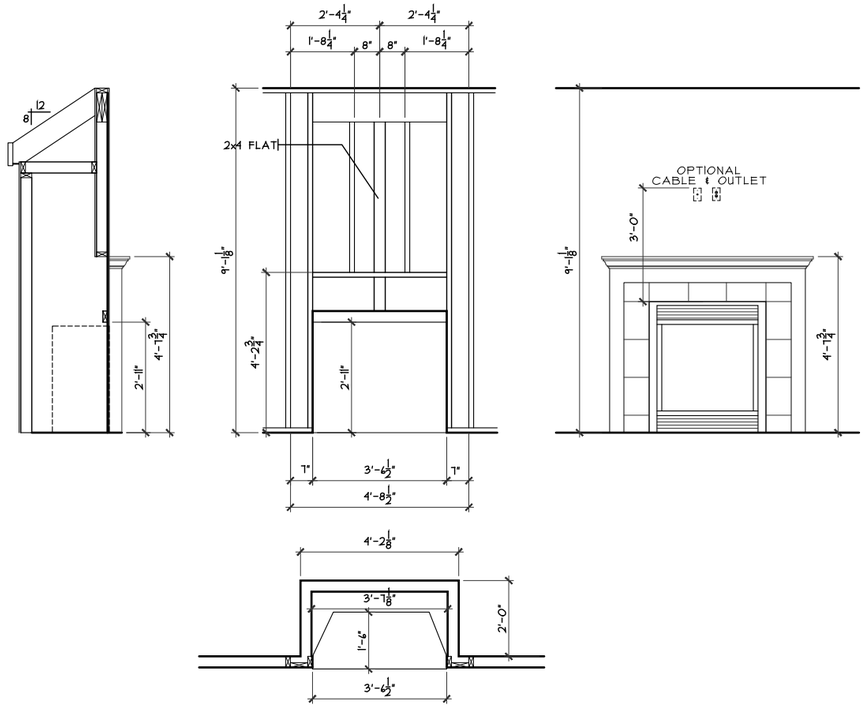

FIREPLACE FRAMING DETAIL

SCALE: 1/4" = 1'-0"

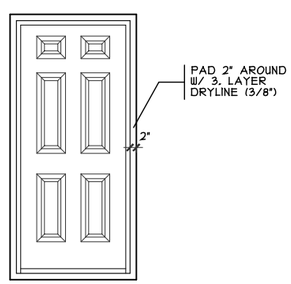

DOOR FRAMING DETAIL

SCALE: 1/4" = 1'-0"

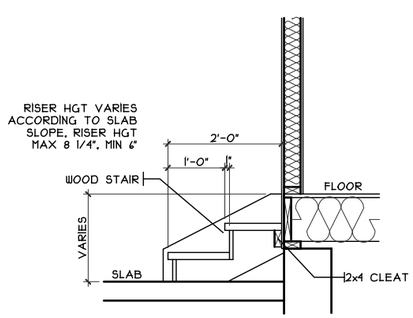

GARAGE STAIRS DETAIL

SCALE: 1/8" = 1'-0"

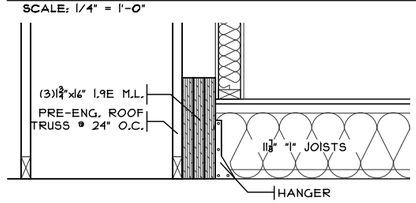

GARAGE DETAIL

1 A3 SCALE: 1/2" = 1'-0"

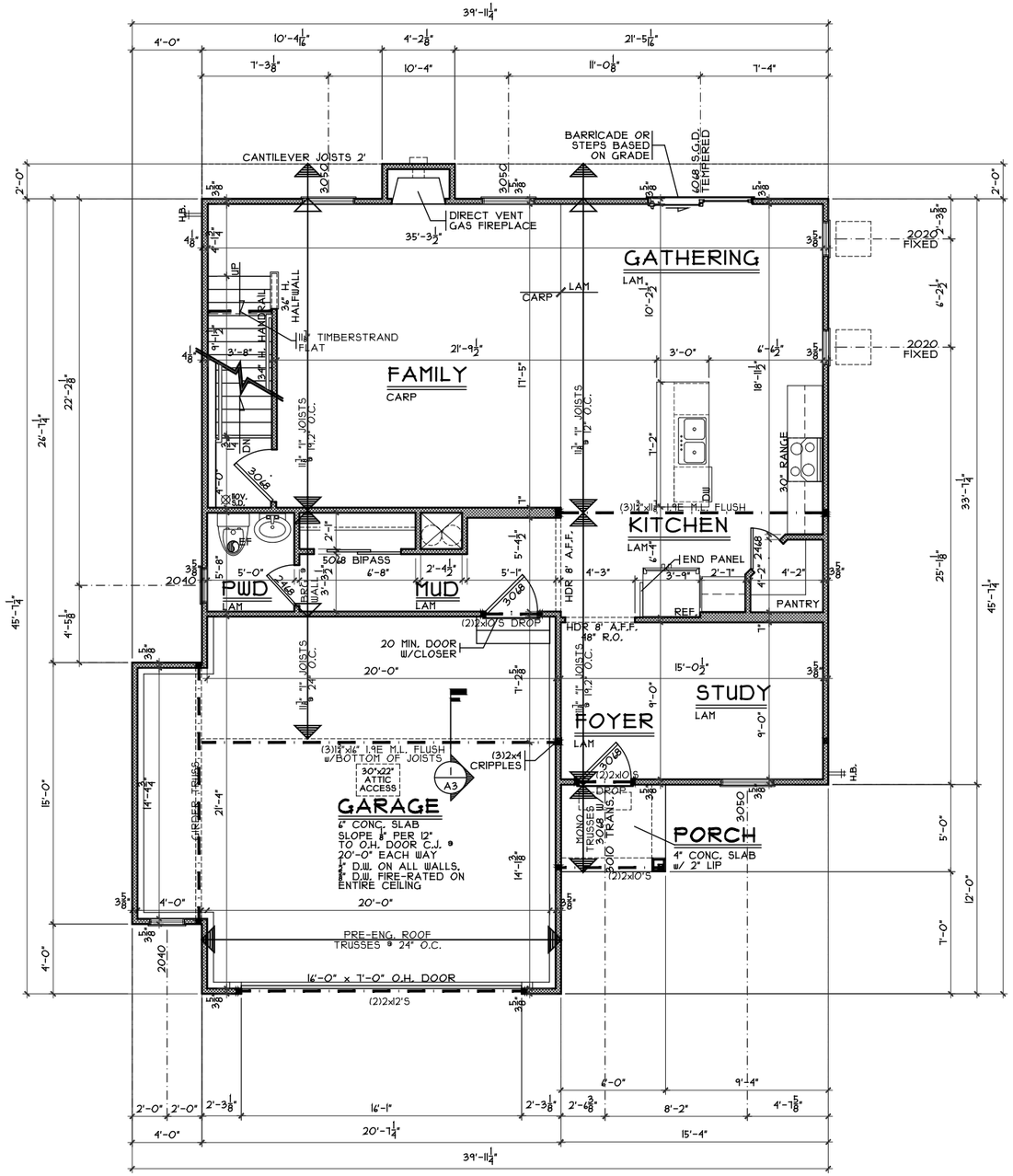

FIRST FLOOR PLAN

SCALE: 1/8" = 1'-0" 1020 SQ. FT.

OPTIONS

Issue Dates

Review #1 - 5.16.2019

Goldbourne - A3 - Comp.

Cristo Homes reserves all property rights in these plans. These plans are not to be reproduced, changed, or copied in any manner. They are not to be given to a third party, either in full or in part, without first receiving written permission from Cristo Homes. In the event these plans are used by a third party, Cristo Homes shall be held harmless.

TH-6076

Proposed Residence:

Gattermeyer Residence
111 Hanford Lane
Trails of Todhunter Lot #6076

Monroe
Butler County

CRISTO HOMES
7594-A Tylers Place Blvd.
West Chester, OH 45069
513.755.0570 www.cristohomes.com

First Floor Plan

Plan: Goldbourne
Date : 8.7.2020
Drawn: KMA
Scale : As Noted
Revised: 8.19.2020
Sheet : 4 of 12

A3

CRI20173.DWG • PLANS PREPARED BY SABO DESIGN ASSOCIATES • 550 WARDS CORNER ROAD SUITE 201, LOVELAND, OH 45140 • 513.683.1236 • SABODESIGNASSOC@SABODA.NET • © COPYRIGHT 2020 SABO DESIGN ASSOCIATES
H:\Archives\Cristo\CRI 18150 Goldbourne\CONTRACTS\CRI 20173 TH-6076 (Goldbourne)\CRI20173 TH-6076 (Goldbourne).dwg Tuesday, August 21, 2019 8:04:08 AM

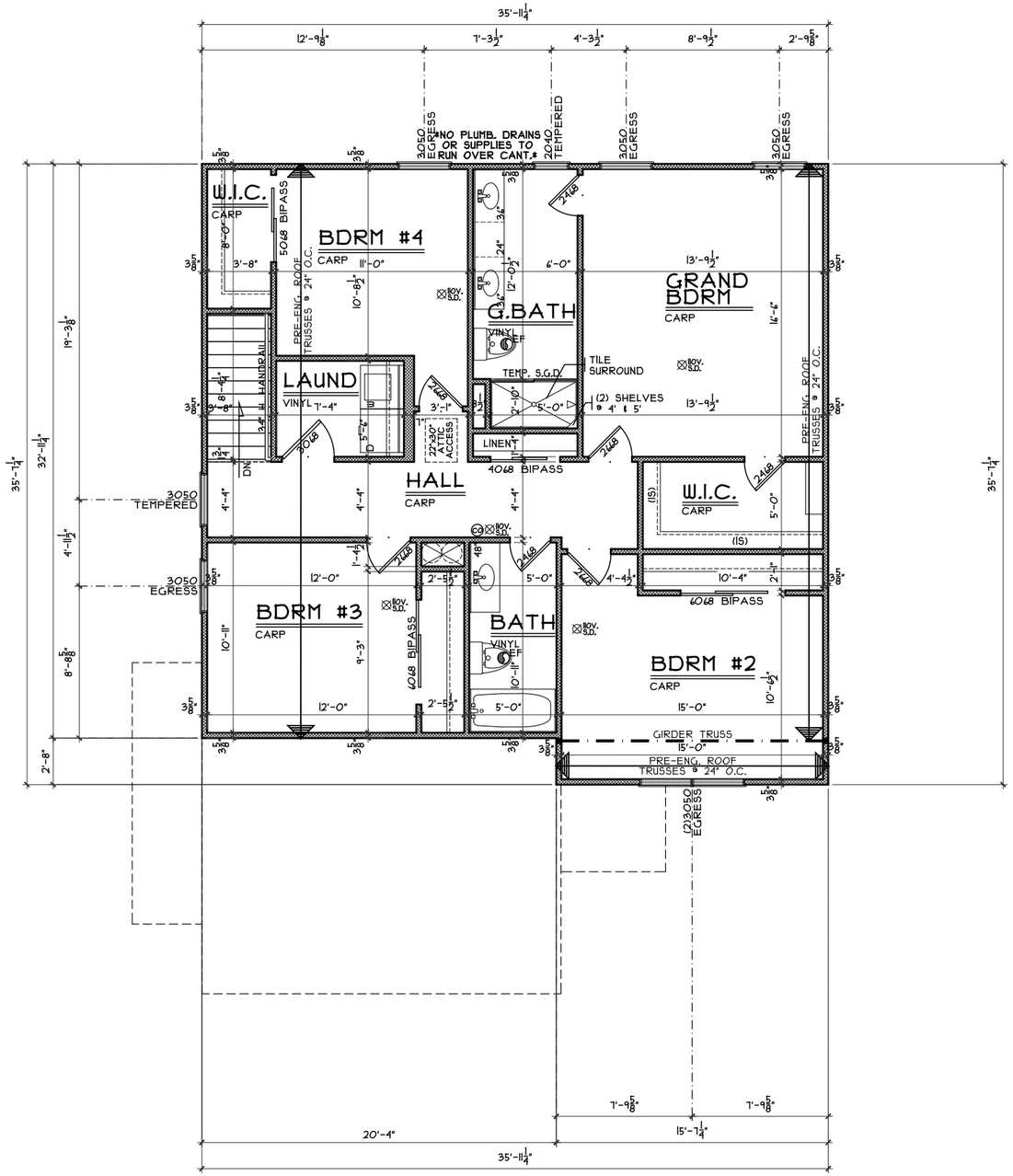

SECOND FLOOR PLAN

SCALE: 1/8" = 1'-0" 1194 SQ. FT.

OPTIONS

Goldbourne - A3 - Comp.

Issue Dates

Review #1 - 5.16.2019

Cristo Homes reserves all property rights in these plans. These plans are not to be reproduced, changed, or copied in any manner. They are not to be given to a third party, either in full or in part, without first receiving written permission from Cristo Homes. In the event these plans are used by a third party, Cristo Homes shall be held harmless.

TH-6076

Proposed Residence:

Gattermeyer Residence

111 Hanford Lane

Trails of Todhunter Lot #6076

Monroe

Butler County

CRISTO HOMES
7594-A Tylers Place Blvd.
West Chester, OH 45069
513.755.0570 www.cristohomes.com

Second Floor Plan

Plan: Goldbourne
Date : 8.7.2020
Drawn: KMA
Scale : As Noted
Revised: 8.19.2020
Sheet : 5 of 12

A4