PLOT PLAN
LOT 6131 (8,383 SF) 0.1924 ACRES
THE TRAILS OF TODHUNTER, SECTION TWO, BLOCK A
CITY OF MONROE
BUTLER COUNTY, OHIO
FOR: CRISTO HOMES

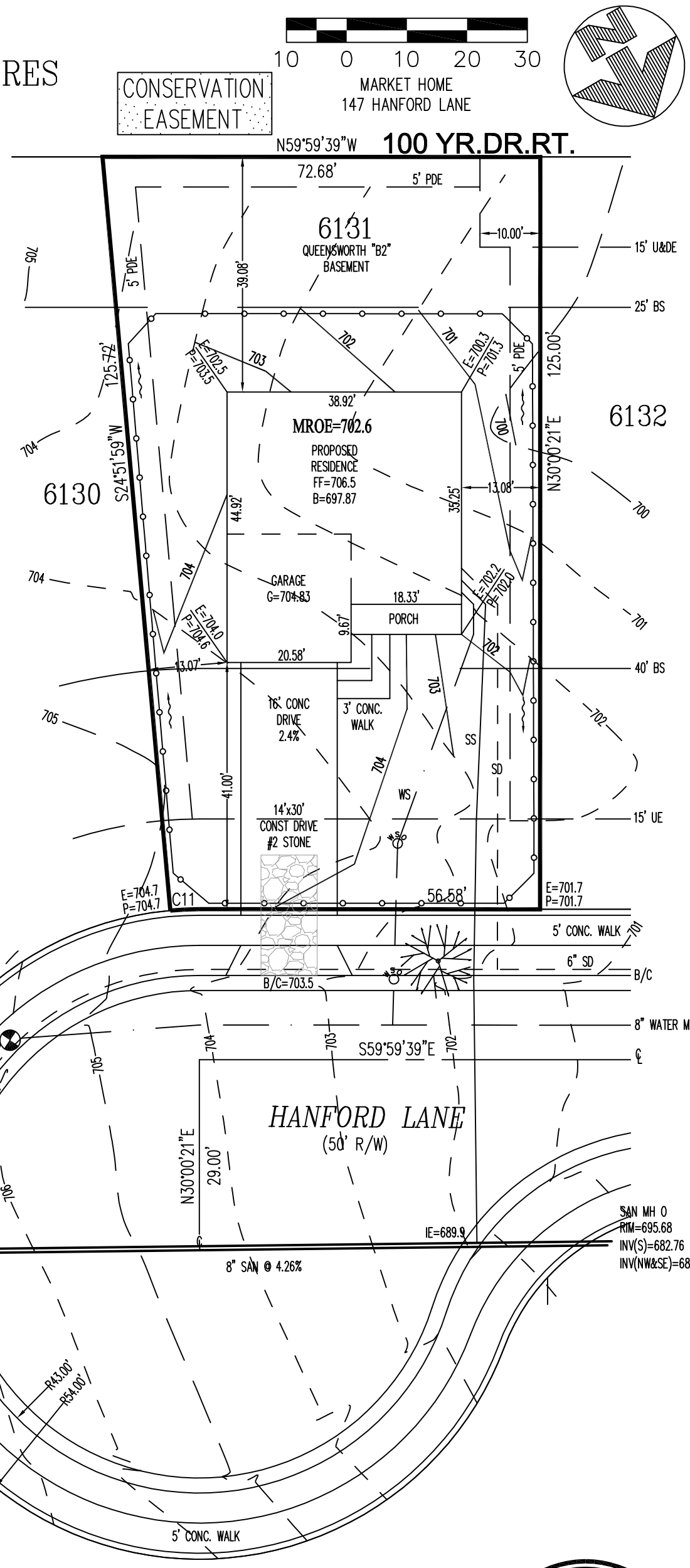

SETBACKS:
FRONT YARD=40'
REAR YARD=25'
SIDE YARD=5' MIN./20' TOTAL
20' BETWEEN BUILDINGS

GREEN VASE ZELKOVA

LOT COVERAGE = 34.3%

M.R.O.E.=701.5 (PER GRADING PLAN)
M.R.O.E.=702.6 (PER PLAT)

TOP OF WINDOW WELLS OR BOTTOM OF BASEMENT WINDOWS TO BE AT OR ABOVE THE M.R.O.E.

TOPOGRAPHY FROM FIELD LOCATIONS DATED SEPT. 2021.
MAY NOT REFLECT CURRENT CONDITIONS.

FOR PERMITTING PURPOSES ONLY.

INFORMATION FROM CONSTRUCTION DRAWINGS. UTILITIES SHOWN HEREON ARE FOR GRAPHICAL PURPOSES ONLY AND MAY NOT REFLECT CURRENT SITE CONDITIONS

CONTRACTOR IS RESPONSIBLE FOR THE VERIFICATION OF THE LOCATION AND DEPTH OF WATER, SANITARY AND OTHER UTILITY MAINS AND SERVICES BEFORE CONSTRUCTION.

GRADE/SPOT ELEVATIONS, FOUNDATION ELEVATIONS ARE ONLY RECOMMENDATIONS AND MAY VARY DUE TO CURRENT SITE CONDITIONS.

ALL ELEVATIONS ARE EXISTING UNLESS SPECIFIED WITH AN "E" FOR EXISTING OR A "P" FOR PROPOSED.

A STANDARD FORMULA WAS USED TO DETERMINE FINISH FLOOR GRADE. FINAL FINISH FLOOR ELEVATION IS CONTRACTOR'S RESPONSIBILITY.

UNLESS F.F.E., M.O.E. OR M.B.E. ARE FIELD VERIFIED BY AN ENGINEERING FIRM, CONTRACTOR TAKES FULL RESPONSIBILITY FOR THE FINISH FLOOR ELEVATION.

CONTRACTOR IS RESPONSIBLE FOR POSITIVE DRAINAGE AROUND/AWAY FROM HOUSES AND APPROPRIATE FINAL GRADING TO INSURE PROPER DRAINAGE OF THE LOT.

APEX ASSUMES NO RESPONSIBILITY FOR SOIL CONDITIONS, GROUND WATER CONDITIONS AND ANY POTENTIAL WATER INFILTRATION. CONTRACTOR IS RESPONSIBLE FOR ADEQUATE WATERPROOFING INSTALLATION AND DRAINAGE MEASURES.

APEX ENGINEERING & SURVEYING INC.
ADVISES AGAINST HOLDING THE MINIMUM REQUIRED DISTANCE ON ANY AND ALL SETBACKS, FRONT, REAR, AND SIDES. THE BUILDER ASSUMES ALL RESPONSIBILITIES FOR ANY BUILDING ENCROACHMENTS THAT MAY OCCUR.

CITY OF MONROE NOTES:
FINAL GRADING WITH ESTABLISHED GROUND COVER MUST BE IN PLACE PRIOR TO ANY LAND TRANSFERS.

#2 STONE CONSTRUCTION DRIVEWAY MUST BE PLACED PRIOR TO ANY EARTHWORK ACTIVITY OR SILT FENCE PLACEMENT.

PERIMETER BMP'S (BEST MANAGEMENT PRACTICES) MUST BE PLACED PRIOR TO ANY STRIPPING, EXCAVATION OF FOOTERS, ETC.

ALL STRAW WADDLES USED MUST BE A MIN. OF 12" DIAMETER AND PROPERLY EMBEDDED.

NO STRAW WADDLES SHALL BE USED ADJACENT TO CONSERVATION EASEMENT AREAS OR STATE WATERWAYS.

HOUSE=1663 SF

C11
R=54.00'
L=4.84'

QUANTITIES

TOTAL LOT AREA	8383	sq. ft.
CITY WALK	225.5	sq. ft.
HOUSE WALK	49.2	sq. ft.
DRIVE	752	sq. ft.
APRON	92.5	sq. ft.
PATIO AND PORCHES	91.7	sq. ft.
DECK		sq. ft.
SEEDING AREA	6237.7	sq. ft.

STATE OF OHIO
KENNETH R. COMBS
7311
REGISTERED
PROFESSIONAL SURVEYOR

2 WORKING DAYS
BEFORE YOU DIG
OHIO811.org
CALL TOLL FREE 800-362-2764
OHIO UTILITIES PROTECTION SERVICE

SCALE: 1"=20'
DATE: 11/23/2021
DRAWN: REW
DESIGNED:
CHECKED: KRC

APEX ENGINEERING & SURVEYING, INC.
1068 N. UNIVERSITY BLVD MIDDLETOWN, OHIO 45042
PH.-(513) 424-5202 OR (513) 932-8991 FAX - (513) 424-6202

REVISIONS:
1.
2.
3.
4.

PROJECT: TRAILS OF TODHUNTER
DRAWING: 212881PA

SHEET 1 OF 1

CR12214.DWG • PLANS PREPARED BY SABO DESIGN ASSOCIATES • 550 WARDS CORNER ROAD SUITE 201, LOVELAND, OH 45140 • 513.683.1236 • SABODESIGNASSOC@SABODA.NET • © COPYRIGHT 2021 SABO DESIGN ASSOCIATES
H:\Archives\Cristo\CR1 1815\ Queensworth\CONTRACTS\CR1 21214 TH-6131 (Queensworth)\CR1 21214 TH-6131 (Queensworth).DWG Wednesday, December 29, 2021 8:44:04 AM

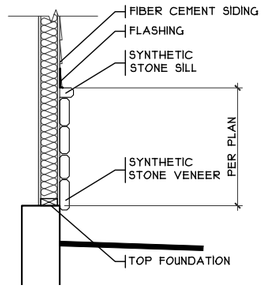

STONE BASE DETAIL

1 / A1 SCALE: 1/8" = 1'-0"

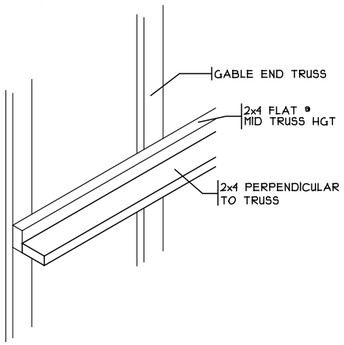

STIFF BACK DETAIL

SCALE: 3/8" = 1'-0"

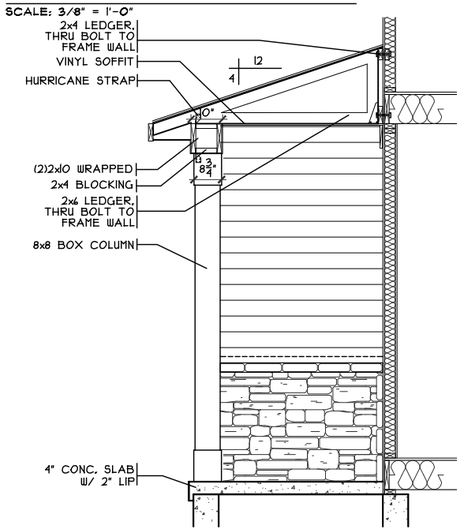

FRONT PORCH DETAIL

SCALE: 1/4" = 1'-0"

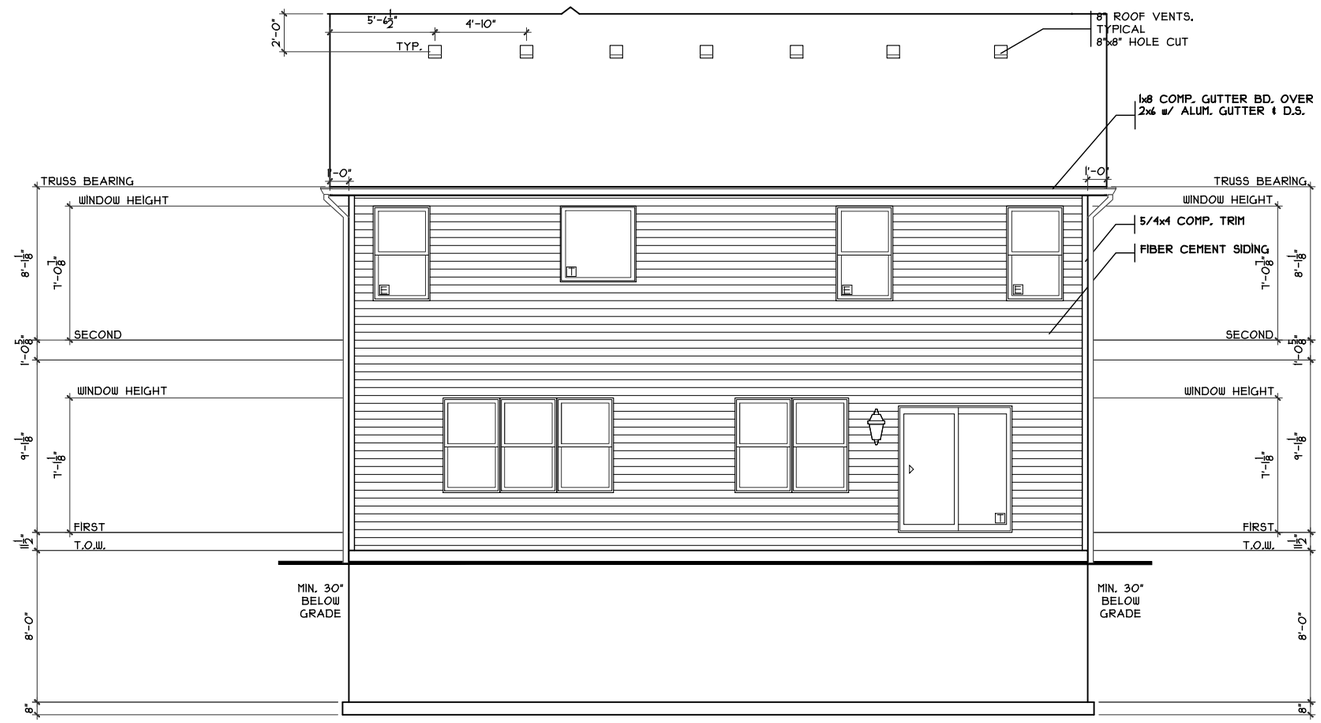

REAR ELEVATION

SCALE: 1/8" = 1'-0"

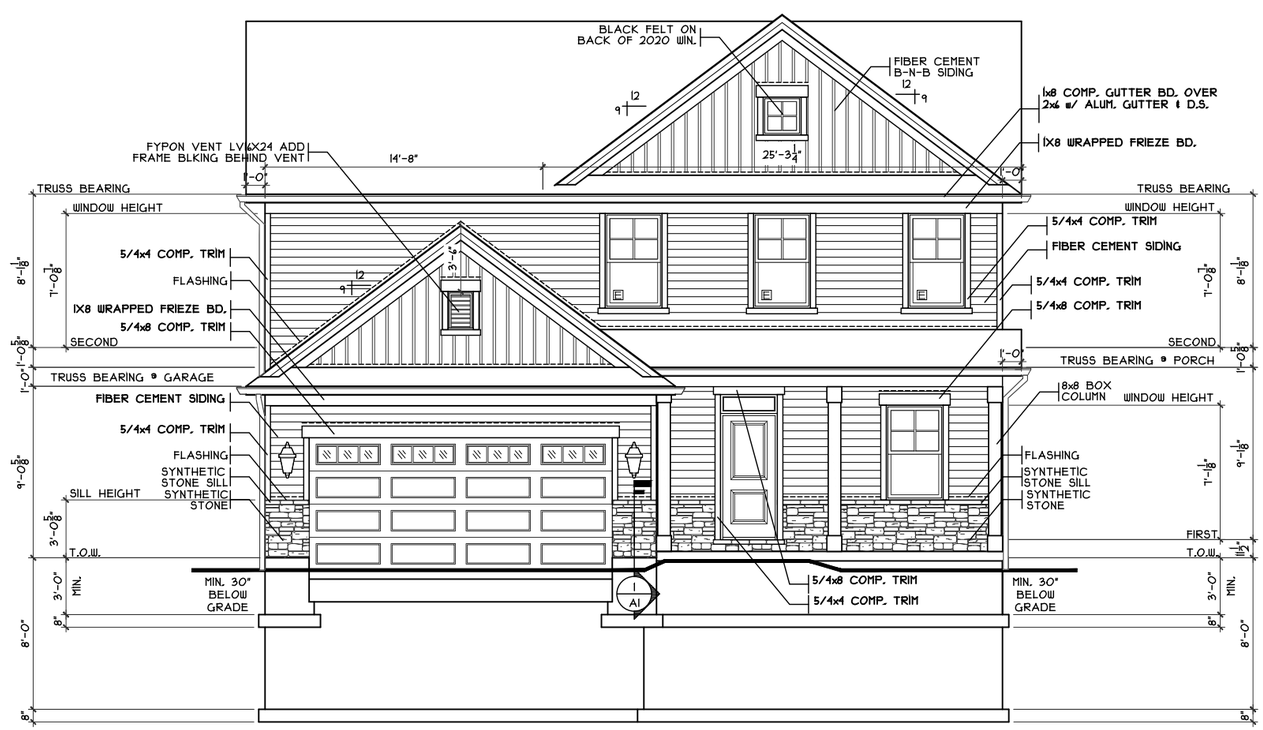

FRONT ELEVATION

SCALE: 1/8" = 1'-0"

SHEET INDEX

SHT#	DESCRIPTION
A1	Front and Rear Elevations
A1a	Left and Right Elevations
A2	Foundation Plan
A3	First Floor Plan
A4	Second Floor Plan
A5	Typical Wall Sections/Stair Section
A6	Typical Framing Details (Composite)
G1	General Notes

NOTE:
PLANS PRINTED ON 24x36 SHEETS TO BE SCALABLE AT FULL SCALE. 1/4" = 1'-0"
PLANS PRINTED ON 11x17 SHEETS TO BE SCALABLE AT HALF SCALE. 1/8" = 1'-0"

PLAN INFO.

2S2433B4

4 BDRMS
2.5 BATH
2 CAR GARAGE
9' 1ST FLR. CLG.

SQUARE FOOTAGE

TOTAL	2428
FIRST	1094
SECOND	1334
LOW. LEV. FIN.	N/A
LOWER (SLAB)	1043
GAR. (SLAB)	398

KEY PLAN

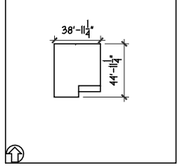

OPTIONS

Issue Dates

Review

Queensworth - B2 - Comp.

Cristo Homes reserves all property rights in these plans. These plans are not to be reproduced, changed, or copied in any manner. They are not to be given to a third party, either in full or in part, without first receiving written permission from Cristo Homes. In the event these plans are used by a third party, Cristo Homes shall be held harmless.

Prestige - TH-6131

Proposed Residence:

Market Home
147 Hanford Lane
Trails of Todhunter Lot #6131

Monroe
Butler County

CRISTO HOMES
7994 A Tylers Place Blvd.
West Chester, OH 45069
513.755.0570 www.cristohomes.com

Front And Rear Elevations

Plan: Queensworth
Date : 11.15.2021
Drawn: SMC
Scale : As Noted
Revised: 12.29.2021
Sheet : 1 of 15

A1

CRI2214.DWG • PLANS PREPARED BY SABO DESIGN ASSOCIATES • 550 WARDS CORNER ROAD SUITE 201, LOVELAND, OH 45140 • 513.683.1236 • SABODESIGNASSOC@SABODA.NET • © COPYRIGHT 2021 SABO DESIGN ASSOCIATES
H:\Archives\Cristo\CRI 1815I Queensworth\CONTRACTS\CRI 2214 TH-6131 (Queensworth)\CRI 2214 TH-6131 (Queensworth).DWG Wednesday, December 29, 2021 8:44:04 AM

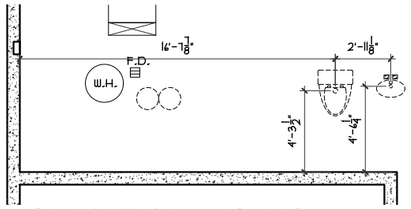

PLUMBING DIMS.

SCALE: 1/8" = 1'-0"

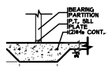

THICKENED SLAB

SCALE: 1/4" = 1'-0"

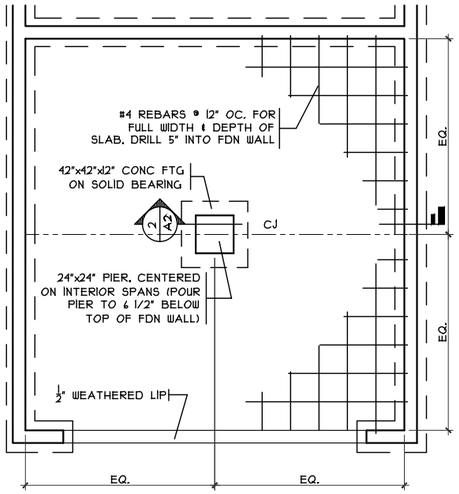

GRADE BM DETAIL

SCALE: 1/8" = 1'-0"

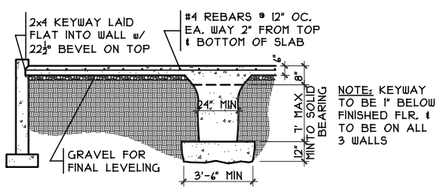

2/A2 GRADE BM SECTION

SCALE: 1/8" = 1'-0"

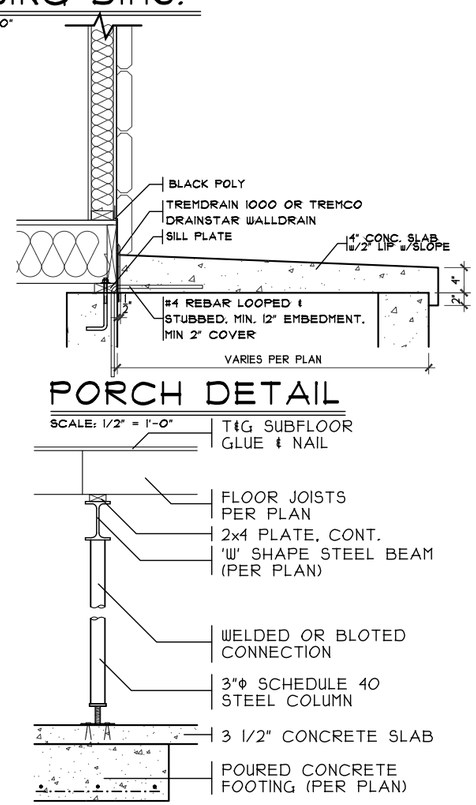

PORCH DETAIL

SCALE: 1/2" = 1'-0"

COLUMN DETAIL

SCALE: 3/8" = 1'-0"

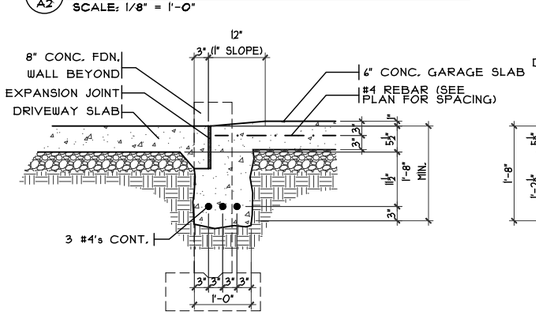

SECTION

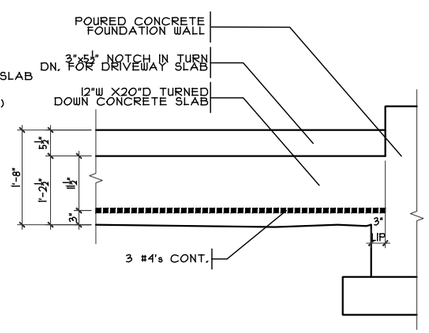

ELEVATION

GARAGE DOOR GRADE BM

SCALE: 3/8" = 1'-0"

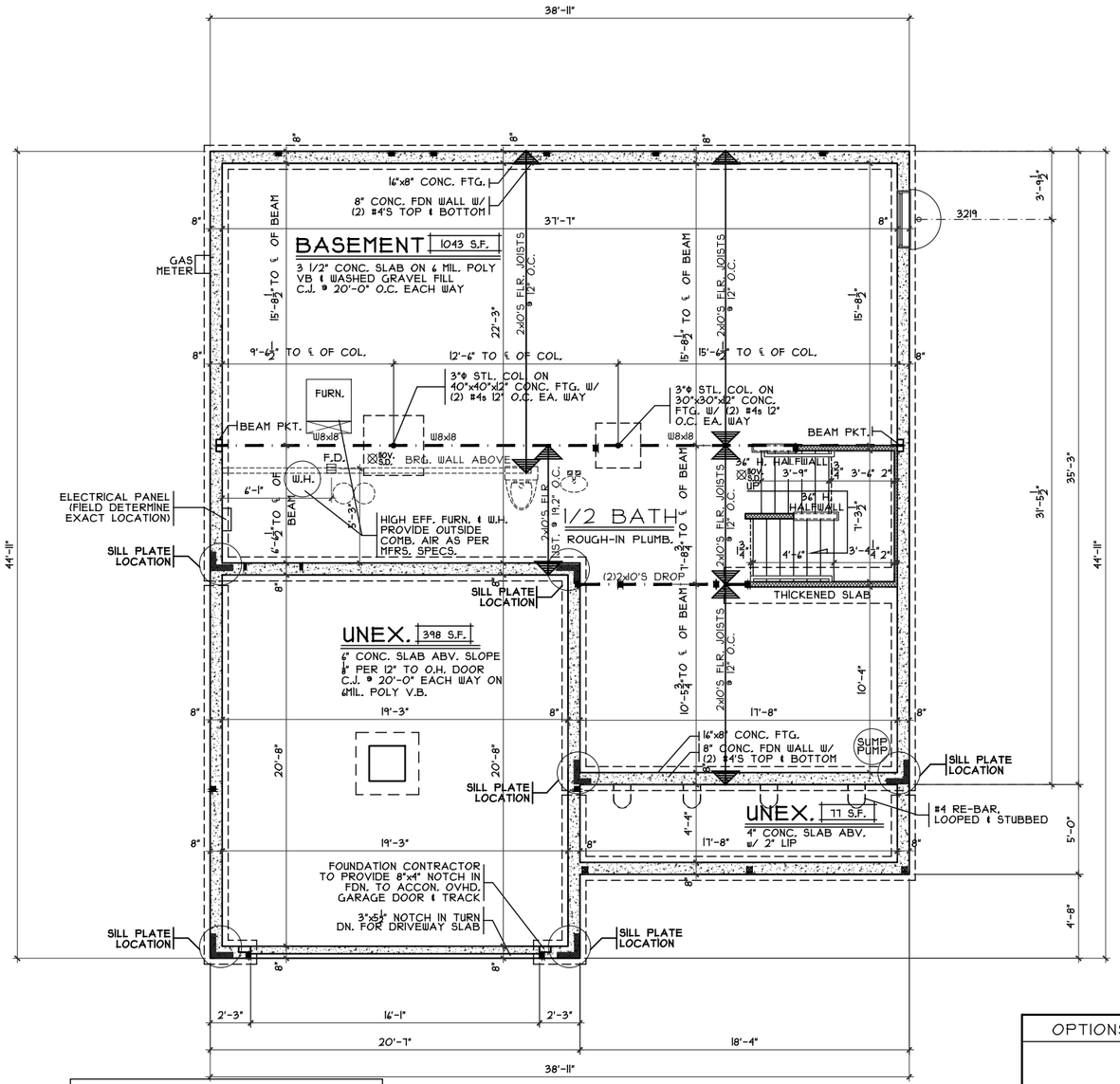

NOTE:
▩ DENOTES BEARING CRIPPLES. THERE SHOULD BE ONE CRIPPLE FOR EACH BEARING MEMBER. CONTINUOUS TO SOLID BEARING BELOW.

FOUNDATION PLAN

SCALE: 1/8" = 1'-0"

OPTIONS

Issue Dates

Review

Queensworth - B2 - Comp.

Cristo Homes reserves all property rights in these plans. These plans are not to be reproduced, changed, or copied in any manner. They are not to be given to a third party, either in full or in part, without first receiving written permission from Cristo Homes. In the event these plans are used by a third party, Cristo Homes shall be held harmless.

Prestige - TH-6131

Proposed Residence:

Market Home

147 Hanford Lane

Trails of Todhunter Lot #6131

Monroe

Butler County

CRISTO HOMES
7594-A Tylers Place Blvd.
West Chester, OH 45069
513.755.0570 www.cristohomes.com

Foundation Plan

Plan: Queensworth
Date : 11.15.2021
Drawn: SMC
Scale : As Noted
Revised: 12.29.2021
Sheet : 3 of 15

A2

CRI2214.DWG • PLANS PREPARED BY SABO DESIGN ASSOCIATES • 550 WARDS CORNER ROAD SUITE 201, LOVELAND, OH 45140 • 513.683.1236 • SABODESIGNASSOC@SABODA.NET • © COPYRIGHT 2021 SABO DESIGN ASSOCIATES
H:\Archives\Cristo\CRI 1815\ Queensworth\CONTRACTS\CRI 2124 TH-6131 (Queensworth)\CRI 2124 TH-6131 (Queensworth).DWG Wednesday, December 29, 2021 8:44:04 AM

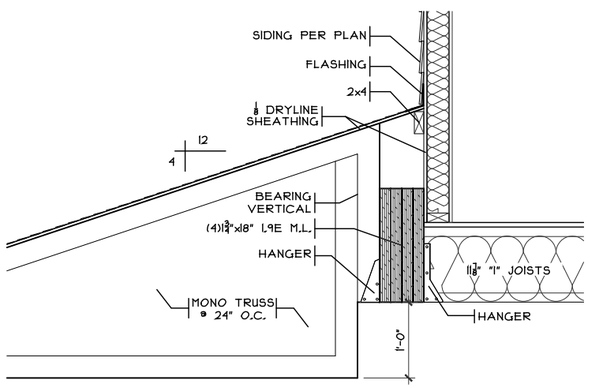

1/A3 GARAGE DETAIL

SCALE: 1/2" = 1'-0"

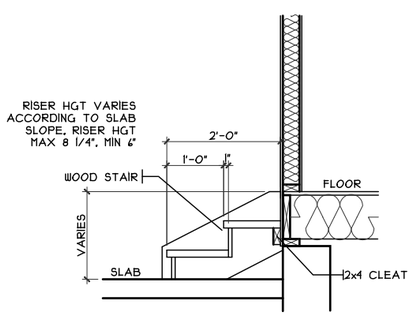

GARAGE STEPS

SCALE: 1/8" = 1'-0"

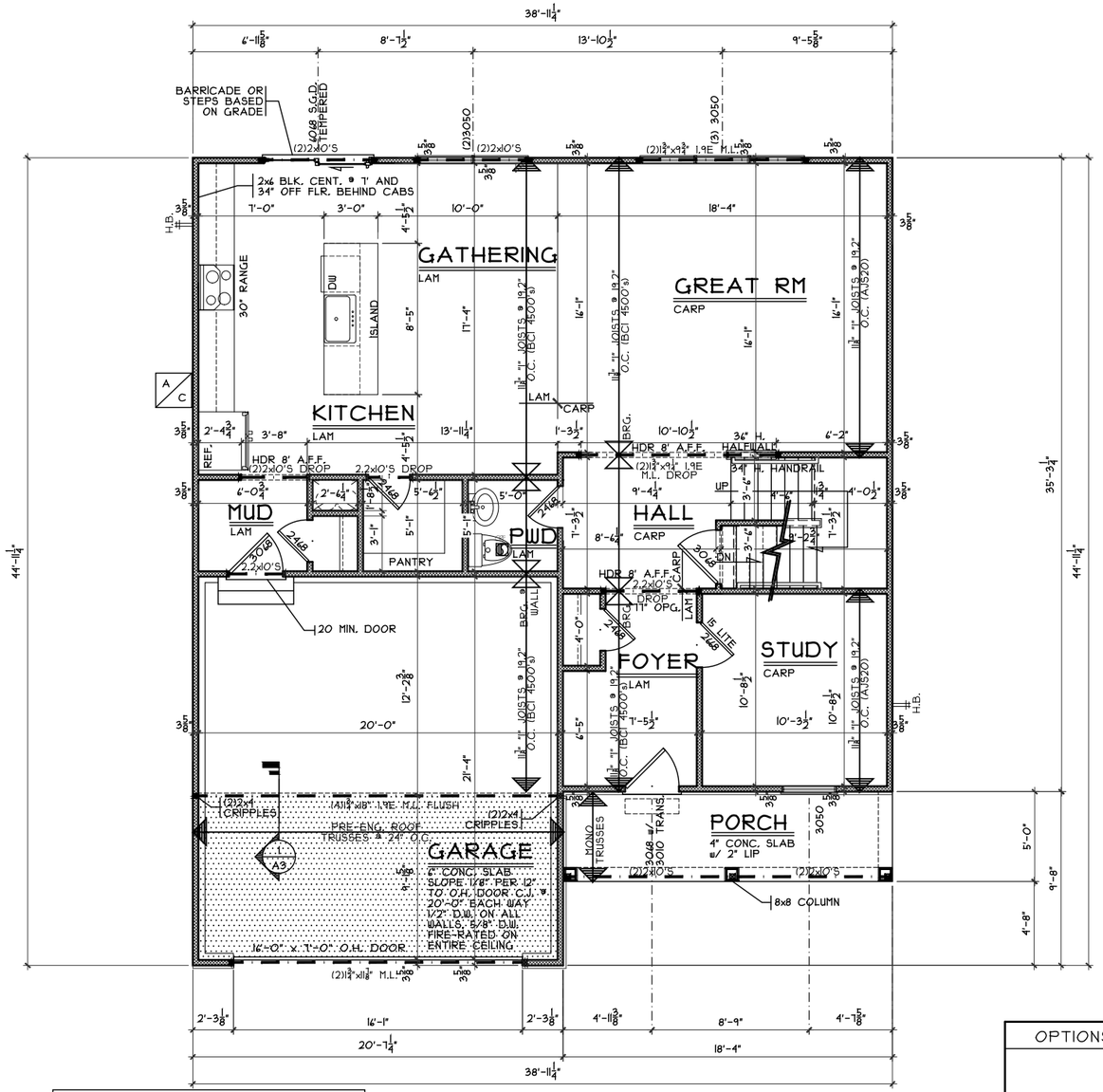

NOTE:
■ DENOTES BEARING CRIPPLES. THERE SHOULD BE ONE CRIPPLE FOR EACH BEARING MEMBER. CONTINUOUS TO SOLID BEARING BELOW.

FIRST FLOOR PLAN

SCALE: 1/8" = 1'-0" 1094 SQ. FT.

OPTIONS

Issue Dates

Review

Queensworth - B2 - Comp.

Cristo Homes reserves all property rights in these plans. These plans are not to be reproduced, changed, or copied in any manner. They are not to be given to a third party, either in full or in part, without first receiving written permission from Cristo Homes. In the event these plans are used by a third party, Cristo Homes shall be held harmless.

Prestige - TH-6131

Proposed Residence:

Market Home
147 Hanford Lane
Trails of Todhunter Lot #6131

Monroe
Butler County

CRISTO HOMES
7594-A Tylers Place Blvd.
West Chester, OH 45069
513.755.0570 www.cristohomes.com

First Floor Plan

Plan: Queensworth
Date : 11.15.2021
Drawn: SMC
Scale : As Noted
Revised: 12.29.2021
Sheet : 5 of 15

A3

CRI2124.DWG • PLANS PREPARED BY SABO DESIGN ASSOCIATES • 550 WARDS CORNER ROAD SUITE 201, LOVELAND, OH 45140 • 513.683.1236 • SABODESIGNASSOC@SABODA.NET • © COPYRIGHT 2021 SABO DESIGN ASSOCIATES
H:\Archives\Cristo\CRI 18151 Queensworth\CONTRACTS\CRI 21214 TH-131 (Queensworth)\CRI 21214 TH-131 (Queensworth).DWG Wednesday, December 29, 2021 8:44:04 AM

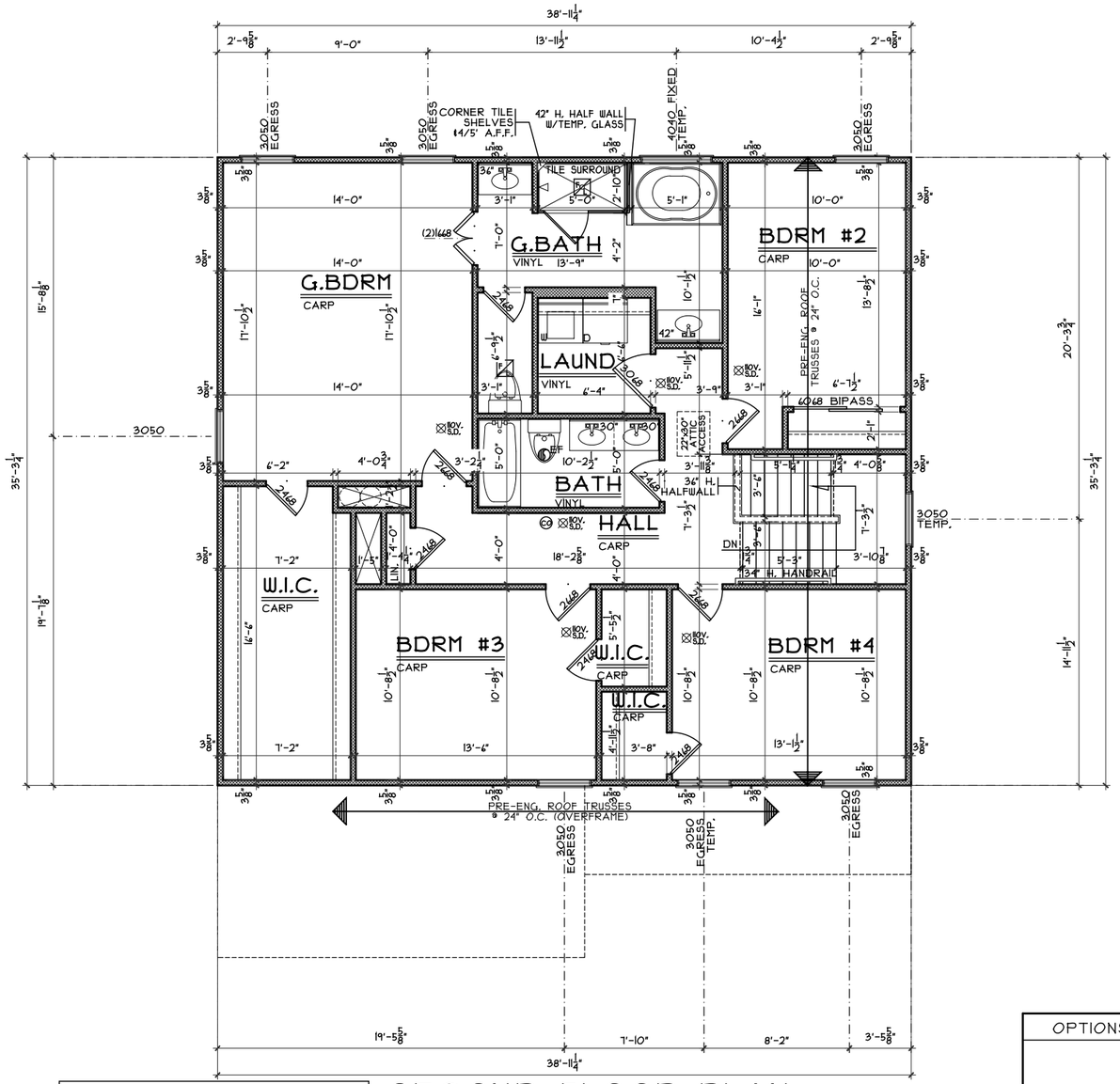

NOTE:
■ DENOTES BEARING CRIPPLES. THERE SHOULD BE ONE CRIPPLE FOR EACH BEARING MEMBER, CONTINUOUS TO SOLID BEARING BELOW.

SECOND FLOOR PLAN

SCALE: 1/8" = 1'-0" 1334 SQ. FT.

OPTIONS

Issue Dates

Review

Queensworth - B2 - Comp.

Cristo Homes reserves all property rights in these plans. These plans are not to be reproduced, changed, or copied in any manner. They are not to be given to a third party, either in full or in part, without first receiving written permission from Cristo Homes. In the event these plans are used by a third party, Cristo Homes shall be held harmless.

Prestige - TH-6131

Proposed Residence:

Market Home
147 Hanford Lane
Trails of Todhunter Lot #6131

Monroe
Butler County

CRISTO HOMES
7594-A Tylers Place Blvd.
West Chester, OH 45069
513.755.0570 www.cristohomes.com

Second Floor Plan

Plan: Queensworth
Date : 11.15.2021
Drawn: SMC
Scale : As Noted
Revised: 12.29.2021
Sheet : 6 of 15

A4