WV 102
1309 Ellington Court
FRANKLIN, OH 45005

2 story basement
finished basement and bath
2 hose bibs - valves required
Master shower - 2 valves - one on each side
Hall bath - soaker - wall mount faucet WITH shower heads !!
Laundry Tub
Vent Kitchen
Softener Bypass
Well Tank - No expansion tank , no pressure valve , no dual check !!

Gas Furnace and Range

CRI25006.DWG • PLANS PREPARED BY SABO DESIGN ASSOCIATES • 550 WARDS CORNER ROAD SUITE 201, LOVELAND, OH 45140 • 513.683.1236 • SABODESIGNASSOC@SABODA.NET • © COPYRIGHT 2025 SABO DESIGN ASSOCIATES

H:\Archives\Cristo\CRI1852 Kingsmark\CONTRACTS\CRI25006 WV-102 (Kingsmark East) B1\CRI25006 WV-102 Kingsmark East B1.dwg Friday, October 11, 2019 8:22:39 AM

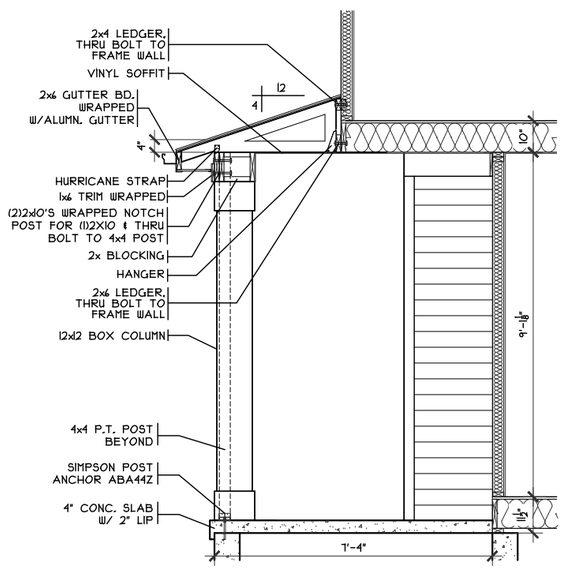

1 A1 FRONT PORCH DETAIL

SCALE: 1/4" = 1'-0"

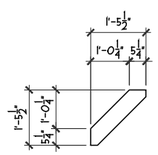

BRACKET DETAIL

SCALE: 1/4" = 1'-0"

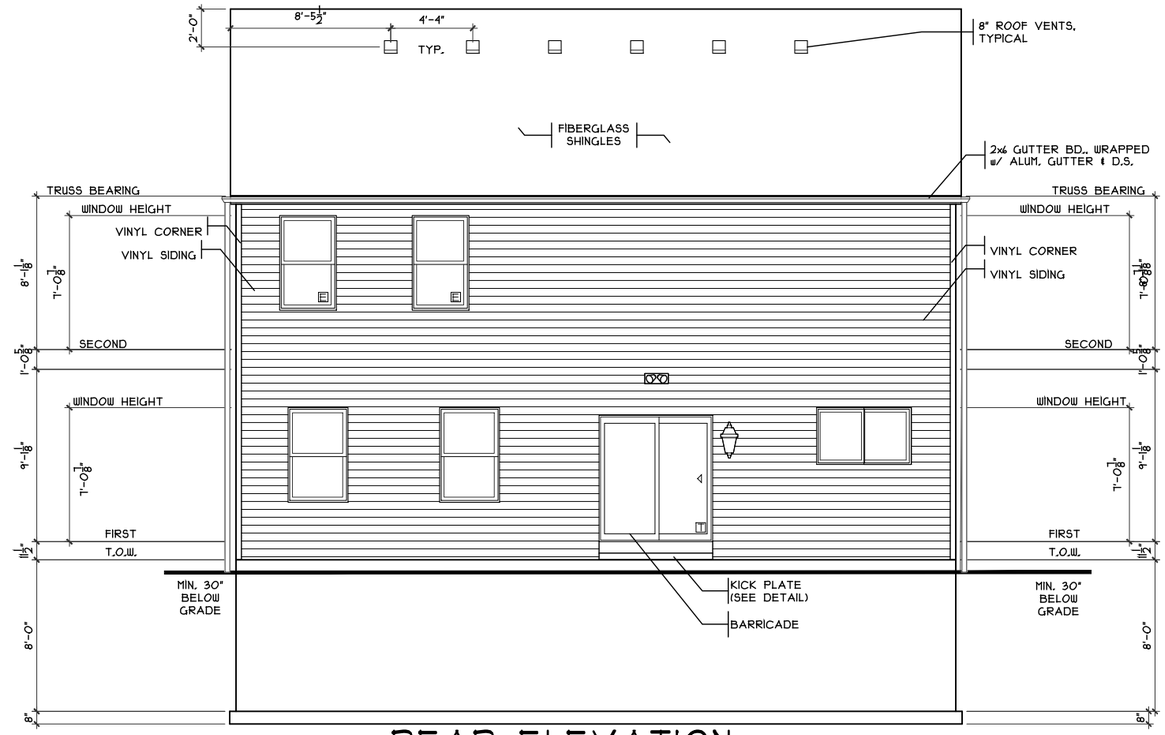

REAR ELEVATION

SCALE: 1/8" = 1'-0"

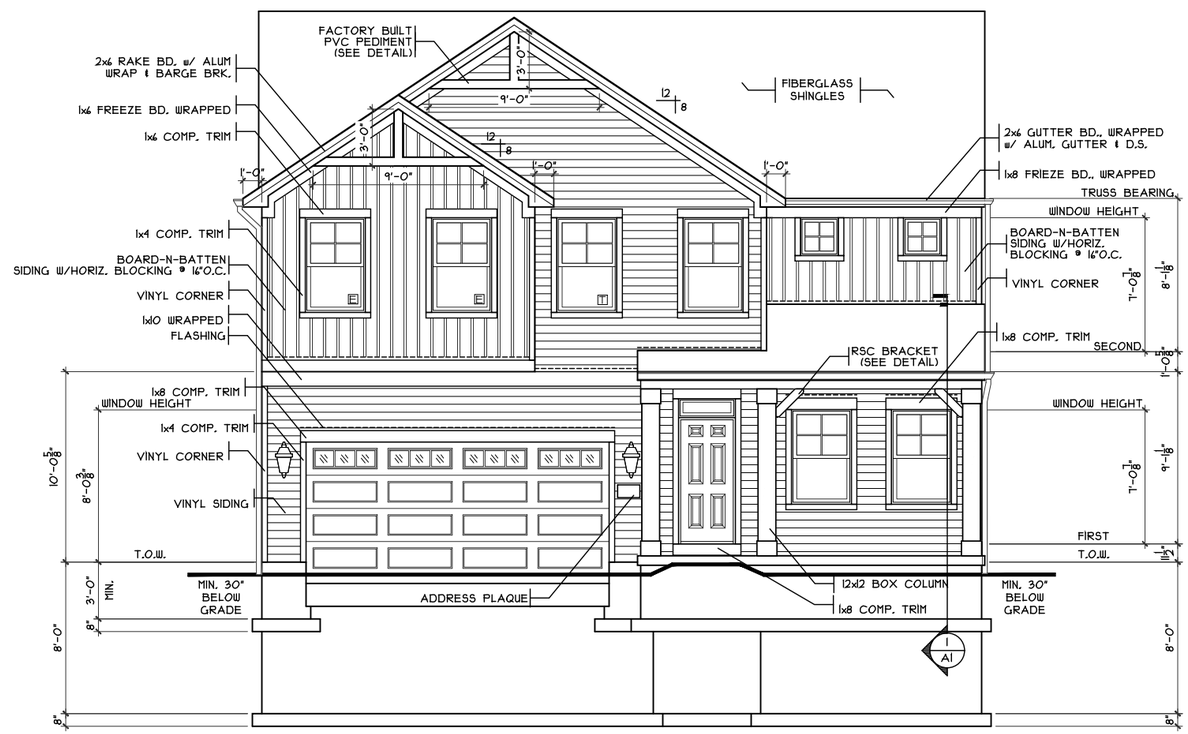

FRONT ELEVATION

SCALE: 1/8" = 1'-0"

SHEET INDEX	
SHT#	DESCRIPTION
A1	Front and Rear Elevations
A1a	Left and Right Elevations
A2	Foundation Plan
A2a	Optional Lower Level Plan
A3	First Floor Plan
A4	Second Floor Plan
A5	Typical Wall Sections/Stair Section
A6	Typical Framing Details (Aluminum)
G1	General Notes

NOTE:
PLANS PRINTED ON 24x36 SHEETS TO BE SCALABLE AT FULL SCALE. 1/4" = 1'-0"
PLANS PRINTED ON 11x17 SHEETS TO BE SCALABLE AT HALF SCALE. 1/8" = 1'-0"

PLAN INFO.
2S2795B4

4 BDRMS
2.5 BATH
2 CAR GARAGE
9' 1ST FLR. CLG.

SQUARE FOOTAGE	
TOTAL	2795
FIRST	1220
SECOND	1575
LOW. LEV. FIN.	422
LOWER (SLAB)	1125
GAR. (SLAB)	593

KEY PLAN

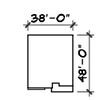

Issue Dates

Review

Kingsmark- B1 - Vinyl

Cristo Homes reserves all property rights in these plans. These plans are not to be reproduced, changed, or copied in any manner. They are not to be given to a third party, either in full or in part, without first receiving written permission from Cristo Homes. In the event these plans are used by a third party, Cristo Homes shall be held harmless.

Prestige - WV-102

Proposed Residence:
Joseph V. Smith
1309 Ellington Court
Waterbury Village Lot-102

Carlisle
Warren County

CRISTO HOMES
7994-A Tylers Place Blvd.
West Chester, OH 45069
513.755.0570 www.cristohomes.com

Front & Rear Elevations

Plan: Kingsmark
Date : 1.15.2025
Drawn: SDG
Scale : As Noted
Revised: 2.4.2025
Sheet : 1 of 10

A1

CR125006.DWG • PLANS PREPARED BY SABO DESIGN ASSOCIATES • 550 WARDS CORNER ROAD SUITE 201, LOVELAND, OH 45140 • 513.683.1236 • SABODESIGNASSOC@SABODA.NET • © COPYRIGHT 2025 SABO DESIGN ASSOCIATES
H:\Archives\Cristo\CR18152 Kingsmark\CONTRACTS\CR125006 WV-102 (Kingsmark East) BI\CR125006 WV-102 Kingsmark East BI.dwg Friday, October 11, 2019 8:22:39 AM

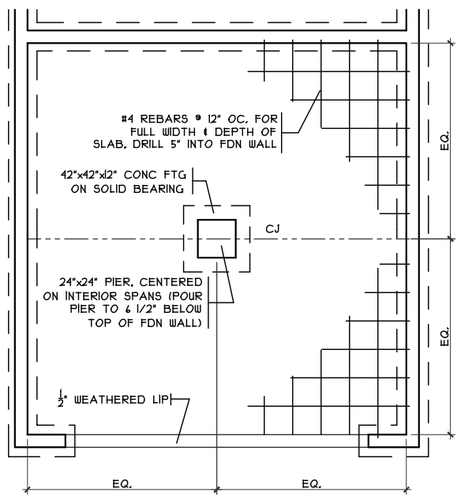

GARAGE BM DETAIL

SCALE: 1/8" = 1'-0"

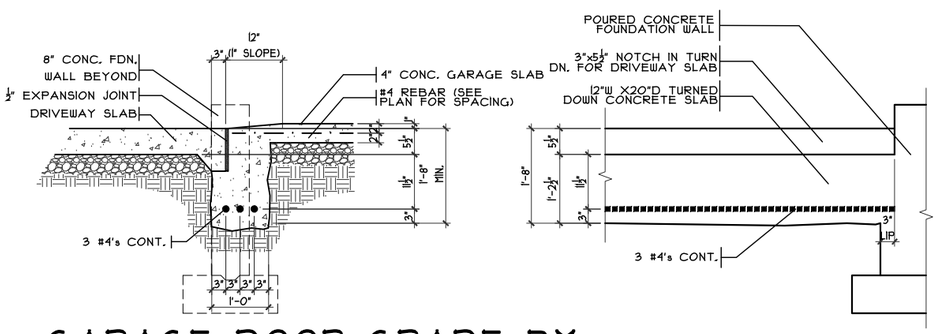

GARAGE DOOR GRADE BM

SCALE: 3/8" = 1'-0"

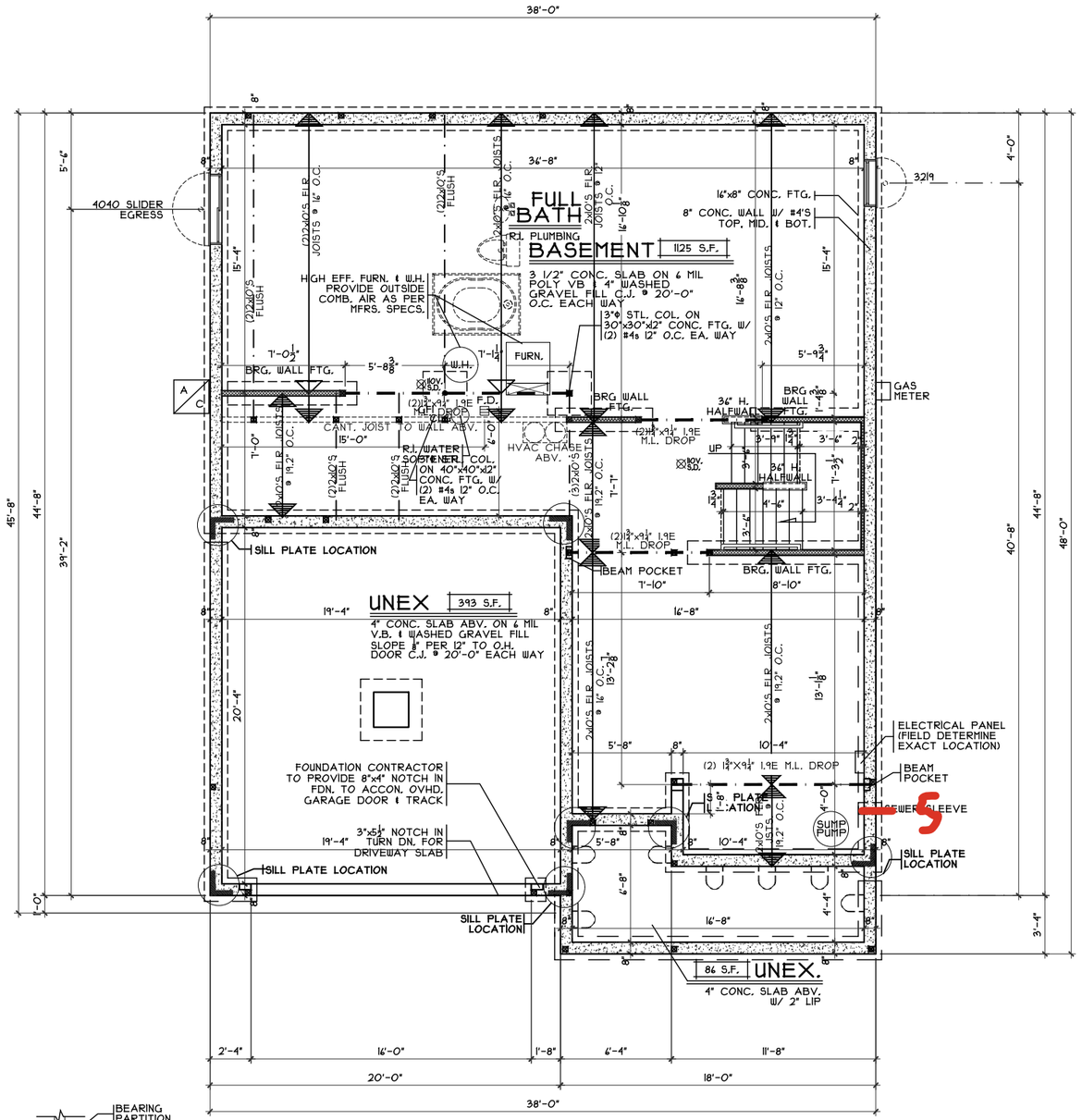

FOUNDATION PLAN

SCALE: 1/8" = 1'-0"

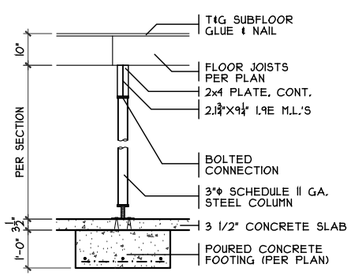

COLUMN DETAIL

SCALE: 1/4" = 1'-0"

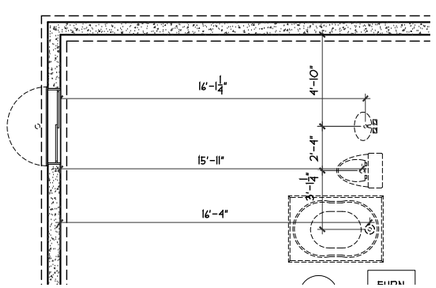

DIMS TO FDN PLUMB.

SCALE: 1/8" = 1'-0"

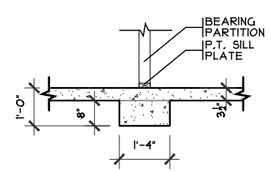

BRG. WALL FOOTING

SCALE: 1/4" = 1'-0"

Issue Dates

Review

Kingsmark- B1 - Vinyl

Cristo Homes reserves all property rights in these plans. These plans are not to be reproduced, changed, or copied in any manner. They are not to be given to a third party, either in full or in part, without first receiving written permission from Cristo Homes. In the event these plans are used by a third party, Cristo Homes shall be held harmless.

Prestige - WV-102

Proposed Residence:

Joseph V. Smith
1309 Ellington Court
Waterbury Village Lot-102

Carlisle
Warren County

CRISTO HOMES
7994-A Tylers Place Blvd.
West Chester, OH 45069
513.755.0570 www.cristohomes.com

Foundation Plan

Plan: Kingsmark
Date : 1.15.2025
Drawn: SDG
Scale : As Noted
Revised: 2.4.2025
Sheet : 12 of 10

A2

CR125006.DWG • PLANS PREPARED BY SABO DESIGN ASSOCIATES • 550 WARDS CORNER ROAD SUITE 201, LOVELAND, OH 45140 • 513.683.1236 • SABODESIGNASSOC@SABODA.NET • © COPYRIGHT 2025 SABO DESIGN ASSOCIATES
H:\Archives\Cristo\CR18152 Kingsmark\CONTRACTS\CR125006 WV-102 (Kingsmark East) BI\CR125006 WV-102 Kingsmark East BI.dwg Friday, October 11, 2019 8:22:39 AM

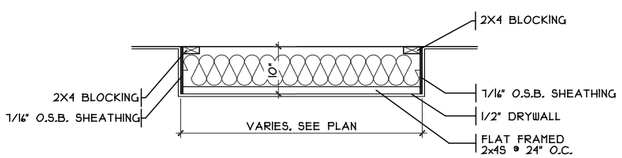

DROP CLG. DETAIL

SCALE: 3/8" = 1'-0"

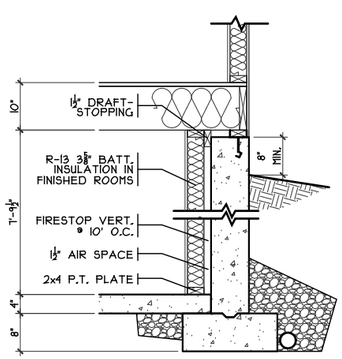

FIN. LL WALL DETAIL

SCALE: 3/8" = 1'-0"

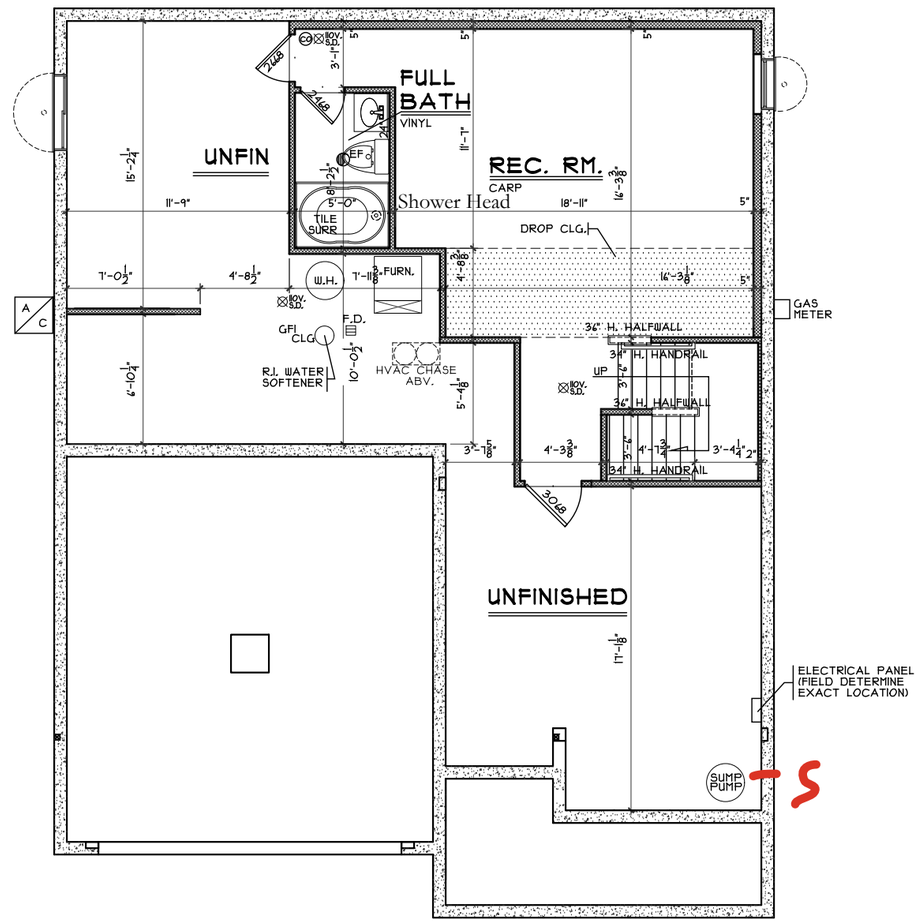

FINISHED LOWER LEVEL

SCALE: 1/8" = 1'-0" 422 SQ. FT.

Issue Dates

Review

Kingsmark- B1 - Vinyl

Cristo Homes reserves all property rights in these plans. These plans are not to be reproduced, changed, or copied in any manner. They are not to be given to a third party, either in full or in part, without first receiving written permission from Cristo Homes. In the event these plans are used by a third party, Cristo Homes shall be held harmless.

Prestige - WV-102

Proposed Residence:

Joseph V. Smith
1309 Ellington Court
Waterbury Village Lot-102

Carlisle
Warren County

CRISTO HOMES
7994-A Tylers Place Blvd.
West Chester, OH 45069
513.755.0570 www.cristohomes.com

Finished Lower Level

Plan: Kingsmark
Date : 1.15.2025
Drawn: SDG
Scale : As Noted
Revised: 2.4.2025
Sheet : 4 of 10

A2a

CRI25006.DWG • PLANS PREPARED BY SABO DESIGN ASSOCIATES • 550 WARDS CORNER ROAD SUITE 201, LOVELAND, OH 45140 • 513.683.1236 • SABODESIGNASSOC@SABODA.NET • © COPYRIGHT 2025 SABO DESIGN ASSOCIATES
H:\Archives\Cristo\CRI8152 Kingsmark\CONTRACTS\CRI25006 @V-102 (Kingsmark Bast) BNCRI25006 @V-102 Kingsmark Bast Bl.dwg Friday, October 11, 2019 8:22:39 AM

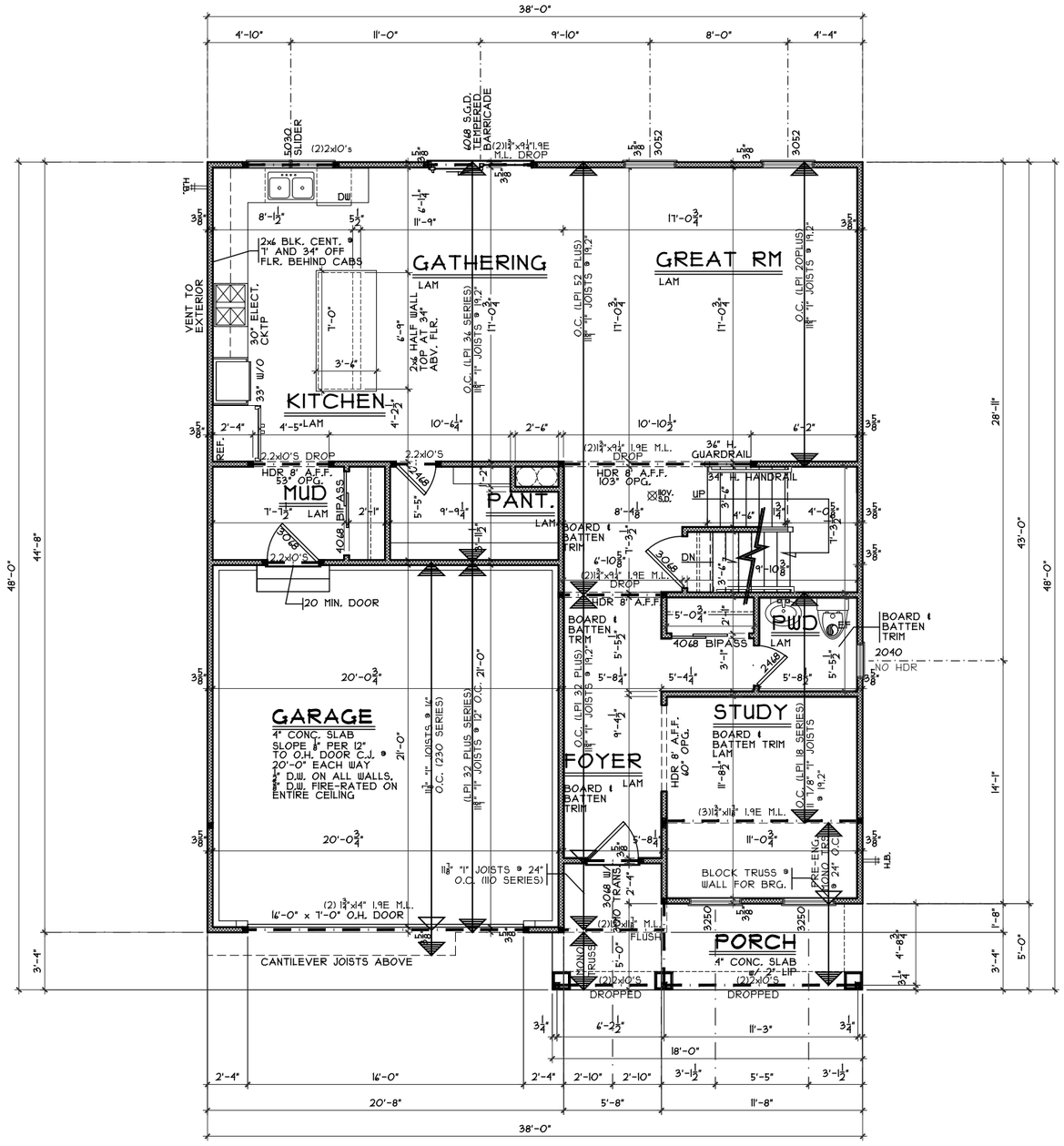

FIRST FLOOR PLAN

SCALE: 1/8" = 1'-0" 1220 SQ. FT.

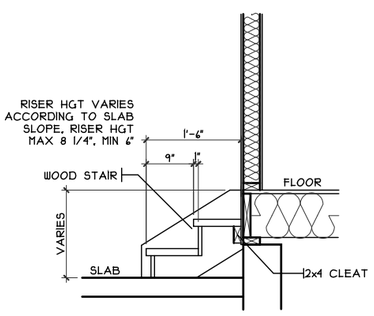

GARAGE STEPS DETAIL

SCALE: 1/8" = 1'-0"

Issue Dates

Review

Kingsmark- B1 - Vinyl

Cristo Homes reserves all property rights in these plans. These plans are not to be reproduced, changed, or copied in any manner. They are not to be given to a third party, either in full or in part, without first receiving written permission from Cristo Homes. In the event these plans are used by a third party, Cristo Homes shall be held harmless.

Carlisle
Warren County

Prestige - WV-102

Proposed Residence:
Joseph V. Smith
1309 Ellington Court
Waterbury Village Lot-102

CRISTO HOMES
7994-A Tylers Place Blvd.
West Chester, OH 45069
513.755.0570 www.cristohomes.com

First Floor Plan

Plan: Kingsmark
Date : 1.15.2025
Drawn: SDG
Scale : As Noted
Revised: 2.4.2025
Sheet : 5 of 10

A3

CRI25006.DWG • PLANS PREPARED BY SABO DESIGN ASSOCIATES • 550 WARDS CORNER ROAD SUITE 201, LOVELAND, OH 45140 • 513.683.1236 • SABODESIGNASSOC@SABODA.NET • © COPYRIGHT 2025 SABO DESIGN ASSOCIATES
H:\Archives\Cristo\CRI8152 Kingsmark\CONTRACTS\CRI25006 WV-102 (Kingsmark Basic) B1\CRI25006 WV-102 Kingsmark Basic B1.dwg Friday, October 11, 2019 8:22:39 AM

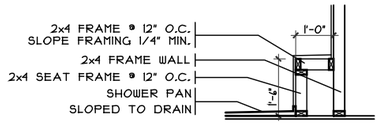

SHWR BENCH DETAIL

SCALE: 1/4" = 1'-0"

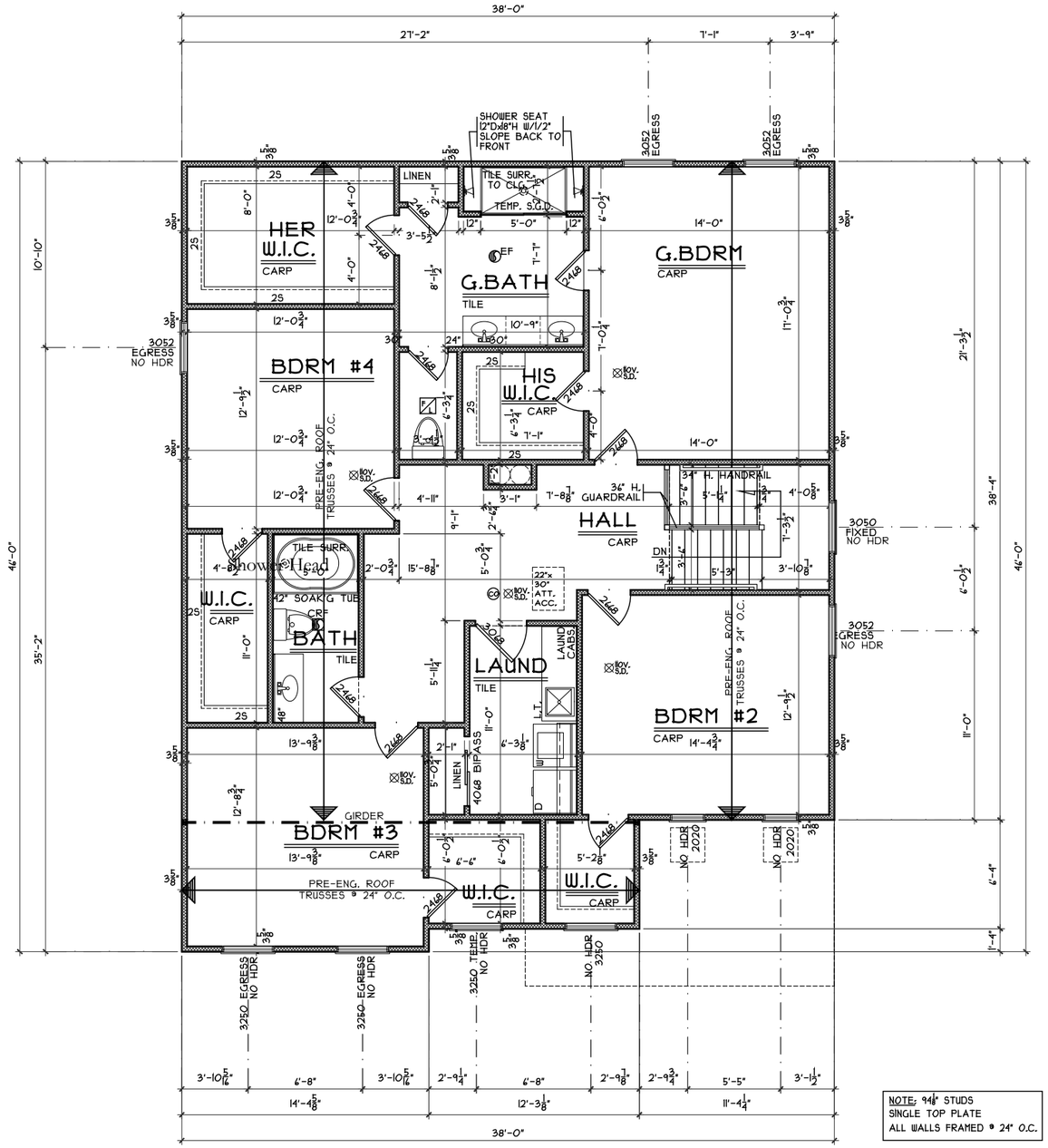

NOTE: 9⅛" STUDS
SINGLE TOP PLATE
ALL WALLS FRAMED @ 24" O.C.

SECOND FLOOR PLAN

SCALE: 1/8" = 1'-0" 1575 SQ. FT.

Issue Dates

Review

Kingsmark- B1 - Vinyl

Cristo Homes reserves all property rights in these plans. These plans are not to be reproduced, changed, or copied in any manner. They are not to be given to a third party, either in full or in part, without first receiving written permission from Cristo Homes. In the event these plans are used by a third party, Cristo Homes shall be held harmless.

Carlisle
Warren County

Prestige - WV-102

Proposed Residence:
Joseph V. Smith
1309 Ellington Court
Waterbury Village Lot-102

CRISTO HOMES
7594-A Tylers Place Blvd.
West Chester, OH 45069
513.755.0570 www.cristohomes.com

Second Floor Plan

Plan: Kingsmark
Date : 1.15.2025
Drawn: SDG
Scale : As Noted
Revised: 2.4.2025
Sheet : 6 of 10

A4