PLOT PLAN
LOT 52 (12,060 SF) 0.2769 AC.
WATERBURY VILLAGE, SECTION 2
CITY OF CARLISLE
WARREN COUNTY, OHIO
FOR: CRISTO HOMES

10 0 10 20 30

MARKET HOME
1607 ASHBURY COURT

SETBACKS:
FRONT YARD=35'
REAR YARD=30'
SIDE YARD=10'

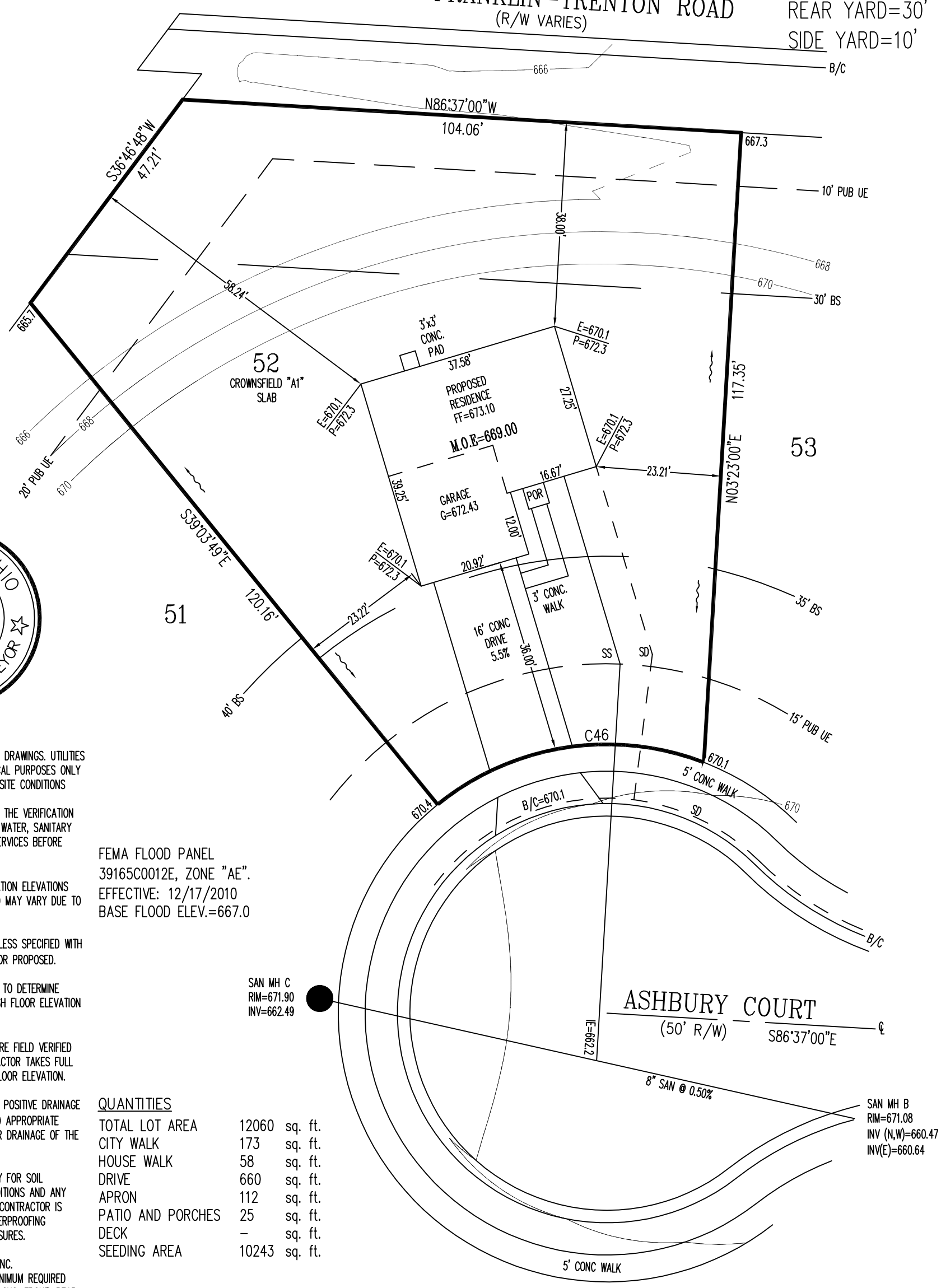

TOPOGRAPHY FROM CONSTRUCTION PLANS.

MAY NOT REFLECT CURRENT CONDITIONS.

STATE OF OHIO
KENNETH R. COMBS
7311
REGISTERED
PROFESSIONAL SURVEYOR

INFORMATION FROM CONSTRUCTION DRAWINGS. UTILITIES SHOWN HEREON ARE FOR GRAPHICAL PURPOSES ONLY AND MAY NOT REFLECT CURRENT SITE CONDITIONS

CONTRACTOR IS RESPONSIBLE FOR THE VERIFICATION OF THE LOCATION AND DEPTH OF WATER, SANITARY AND OTHER UTILITY MAINS AND SERVICES BEFORE CONSTRUCTION.

GRADE/SPOT ELEVATIONS, FOUNDATION ELEVATIONS ARE ONLY RECOMMENDATIONS AND MAY VARY DUE TO CURRENT SITE CONDITIONS.

ALL ELEVATIONS ARE EXISTING UNLESS SPECIFIED WITH AN "E" FOR EXISTING OR A "P" FOR PROPOSED.

A STANDARD FORMULA WAS USED TO DETERMINE FINISH FLOOR GRADE. FINAL FINISH FLOOR ELEVATION IS CONTRACTOR'S RESPONSIBILITY.

UNLESS F.F.E., M.O.E. OR M.B.E. ARE FIELD VERIFIED BY AN ENGINEERING FIRM, CONTRACTOR TAKES FULL RESPONSIBILITY FOR THE FINISH FLOOR ELEVATION.

CONTRACTOR IS RESPONSIBLE FOR POSITIVE DRAINAGE AROUND/AWAY FROM HOUSES AND APPROPRIATE FINAL GRADING TO INSURE PROPER DRAINAGE OF THE LOT.

APEX ASSUMES NO RESPONSIBILITY FOR SOIL CONDITIONS, GROUND WATER CONDITIONS AND ANY PONTENTIAL WATER INFILTRATION. CONTRACTOR IS RESPONSIBLE FOR ADEQUATE WATERPROOFING INSTALLATION AND DRAINAGE MEASURES.

APEX ENGINEERING & SURVEYING INC. ADVISES AGAINST HOLDING THE MINIMUM REQUIRED DISTANCE ON ANY AND ALL SETBACKS, FRONT, REAR, AND SIDES. THE BUILDER ASSUMES ALL RESPONSIBILITIES FOR ANY BUILDING ENCROACHMENTS THAT MAY OCCUR.

FOR PERMITTING PURPOSES ONLY.

FEMA FLOOD PANEL
39165C0012E, ZONE "AE".
EFFECTIVE: 12/17/2010
BASE FLOOD ELEV.=667.0

QUANTITIES

TOTAL LOT AREA	12060	sq. ft.
CITY WALK	173	sq. ft.
HOUSE WALK	58	sq. ft.
DRIVE	660	sq. ft.
APRON	112	sq. ft.
PATIO AND PORCHES	25	sq. ft.
DECK	–	sq. ft.
SEEDING AREA	10243	sq. ft.

M.O.E.=669.00

SCALE: 1"=20'
DATE: 8/26/2021
DRAWN: REW
DESIGNED: –
CHECKED: KRC

APEX ENGINEERING & SURVEYING, INC.
1068 N. UNIVERSITY BLVD MIDDLETOWN, OHIO 45042
PH.-(513) 424-5202 OR (513) 932-8991 FAX - (513) 424-6202

REVISIONS:
1.
2.
3.
4.

PROJECT: WATERBURYVILL
DRAWING: 212174PA

SHEET 1 OF 1

CR121151.DWG • PLANS PREPARED BY SABO DESIGN ASSOCIATES • 550 WARDS CORNER ROAD SUITE 201, LOVELAND, OH 45140 • 513.683.1236 • SABODESIGNASSOC@SABODA.NET • © COPYRIGHT 2021 SABO DESIGN ASSOCIATES
H:\Archives\Cristo\CRI 1849 Crownsfield\SLAB\CONTRACTS\CRI 21151 WV-52 (Crownsfield)\CRI 21151 Crownsfield Slab WV-52.dwg Monday, September 27, 2021 5:04:41 PM

REAR ELEVATION

SCALE: 1/8" = 1'-0"

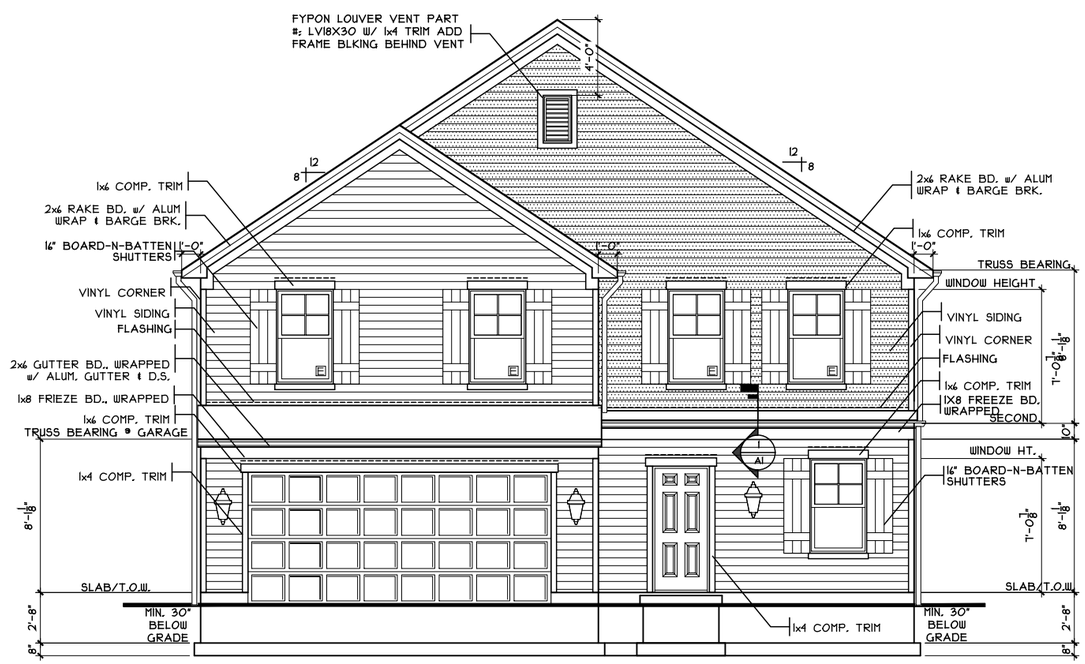

FRONT ELEVATION

SCALE: 1/8" = 1'-0"

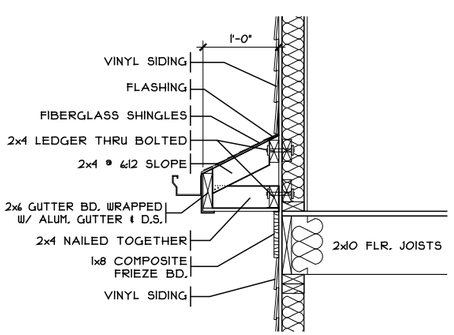

1 / A1 FRONT ROOF DETAIL

SCALE: 1/2" = 1'-0"

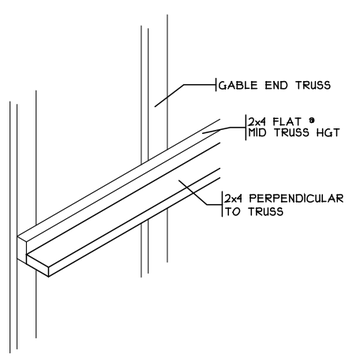

STIFF BACK DETAIL

SCALE: 3/8" = 1'-0"

SHEET INDEX

SHT#	DESCRIPTION
A1	Front and Rear Elevations
A1a	Left and Right Elevations
A2	Foundation Plan
A3	First Floor Plan
A4	Second Floor Plan
A5	Typical Wall Sections/Stair Section
A6	Typical Framing Details (Aluminum)
G1	General Notes
E1	First Floor Electrical
E2	Second Floor Electrical
S1	Second Floor Joist/ Roof Plan

NOTE:
PLANS PRINTED ON 24x36 SHEETS TO BE SCALABLE AT FULL SCALE. 1/4" = 1'-0"
PLANS PRINTED ON 11x17 SHEETS TO BE SCALABLE AT HALF SCALE. 1/8" = 1'-0"

PLAN INFO.
2S1813B4

4 BDRMS
2.5 BATH
2 CAR GARAGE
8' 1ST FLR. CLG.

SQUARE FOOTAGE

TOTAL	1815
FIRST	846
SECOND	1029
LOWER (SLAB)	151
GAR. (SLAB)	404

KEY PLAN

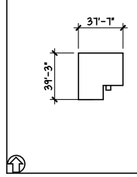

OPTIONS

Issue Dates

Review

Crownsfield Slab - A1 - Vinyl

Cristo Homes reserves all property rights in these plans. These plans are not to be reproduced, changed, or copied in any manner. They are not to be given to a third party, either in full or in part, without first receiving written permission from Cristo Homes. In the event these plans are used by a third party, Cristo Homes shall be held harmless.

Carlisle
Warren County

WV-52
Proposed Residence:
Cristo Rental
1607 Ashbury Ct
Waterbury Village Lot #52

CRISTO HOMES
7994 A Tylers Place Blvd.
West Chester, OH 45069
513.755.0570 www.cristohomes.com

Front & Rear Elevations

Plan: Crownsfield Slab
Date : 8.18.2021
Drawn: SMC
Scale : As Noted
Revised: 9.27.2021
Sheet : 1 of 15

A1

CR121151.DWG • PLANS PREPARED BY SABO DESIGN ASSOCIATES • 550 WARDS CORNER ROAD SUITE 201, LOVELAND, OH 45140 • 513.683.1236 • SABODESIGNASSOC@SABODA.NET • © COPYRIGHT 2021 SABO DESIGN ASSOCIATES

H:\Archives\Cristo\CRI 18149 Crownsfield\SLAB\CONTRACTS\CRI 21151 WV-52 (Crownsfield) Slab WV-52.dwg Monday, September 27, 2021 5:04:41 PM

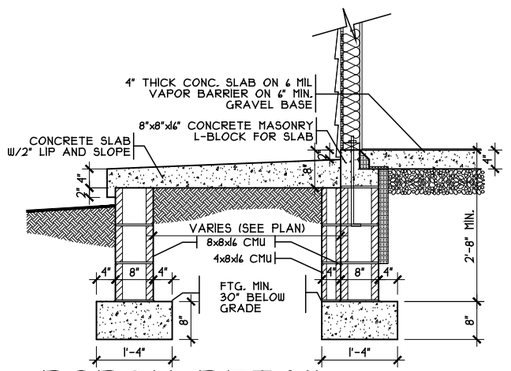

PORCH DETAIL

SCALE: 3/8" = 1'-0"

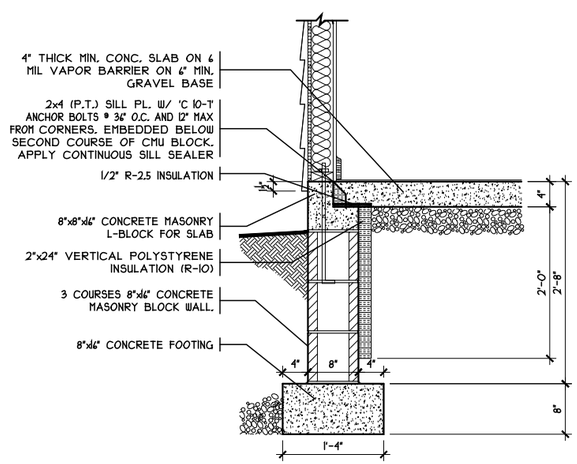

SOG DETAIL

SCALE: 1/2" = 1'-0"

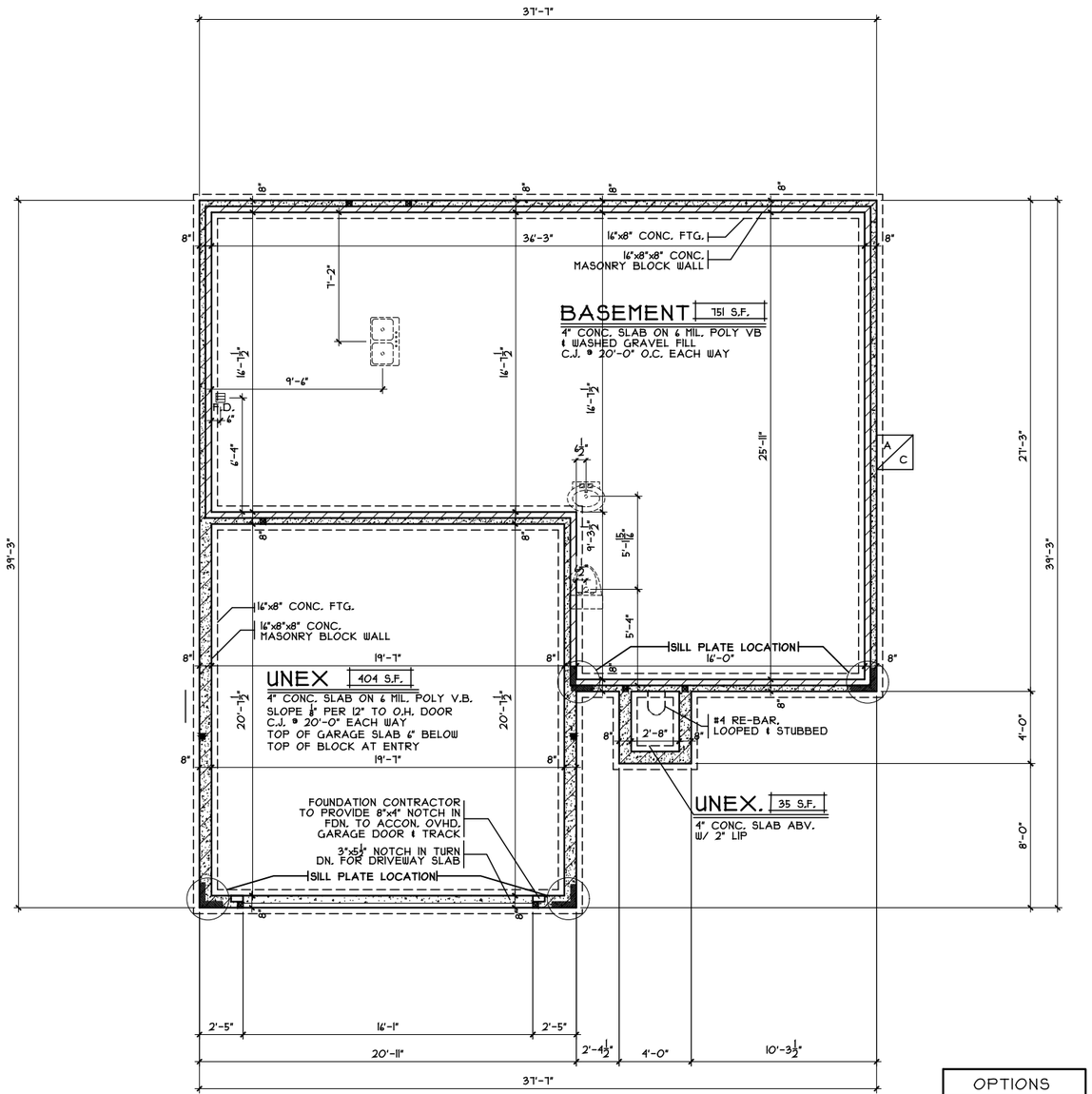

NOTE: ALL EXTERIOR DIMENSIONS ARE TO FACE OF FOUNDATION- MASONRY VENEER TO OVERHANG FOUNDATION AS REQ'D. TO ACCOMMODATE 1" AIRSPACE AT SHEATHING. MAXIMUM OVERHANG TO BE 3/4".

FOUNDATION PLAN

SCALE: 1/8" = 1'-0"

OPTIONS

Crownsfield Slab - A1 - Vinyl

Cristo Homes reserves all property rights in these plans. These plans are not to be reproduced, changed, or copied in any manner. They are not to be given to a third party, either in full or in part, without first receiving written permission from Cristo Homes. In the event these plans are used by a third party, Cristo Homes shall be held harmless.

Issue Dates

Review

Carlisle

Warren County

WV-52

Proposed Residence:

Cristo Rental

1607 Ashbury Ct

Waterbury Village Lot #52

7994-A Tylers Place Blvd.
West Chester, OH 45069
513.755.0570 www.cristohomes.com

Foundation Plan

Plan: Crownsfield Slab
Date : 8.18.2021
Drawn: SMC
Scale : As Noted
Revised: 9.27.2021
Sheet : 3 of 15

A2

CR21151.DWG • PLANS PREPARED BY SABO DESIGN ASSOCIATES • 550 WARDS CORNER ROAD SUITE 201, LOVELAND, OH 45140 • 513.683.1236 • SABODESIGNASSOC@SABODA.NET • © COPYRIGHT 2021 SABO DESIGN ASSOCIATES
H:\Archive\Cristo\CRI 18149 Crownsfield\SLAB\CONTRACTS\CRI 21151 WV-52 (Crownsfield)\CRI 21151 Crownsfield Slab WV-52.dwg Monday, September 27, 2021 5:04:41 PM

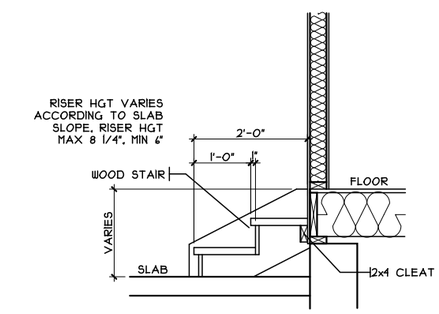

GARAGE STAIRS DETAIL

SCALE: 1/8" = 1'-0"

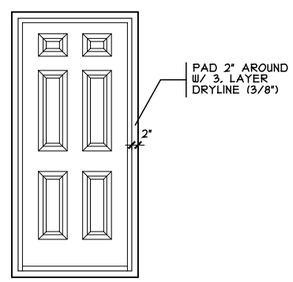

DOOR FRAMING DETAIL

SCALE: 1/4" = 1'-0"

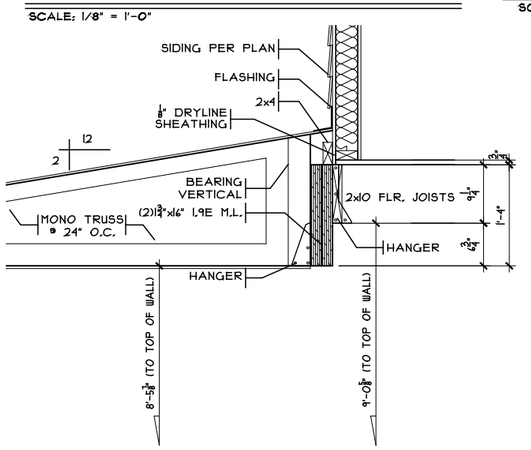

GARAGE DETAIL

1 A3

SCALE: 1/2" = 1'-0"

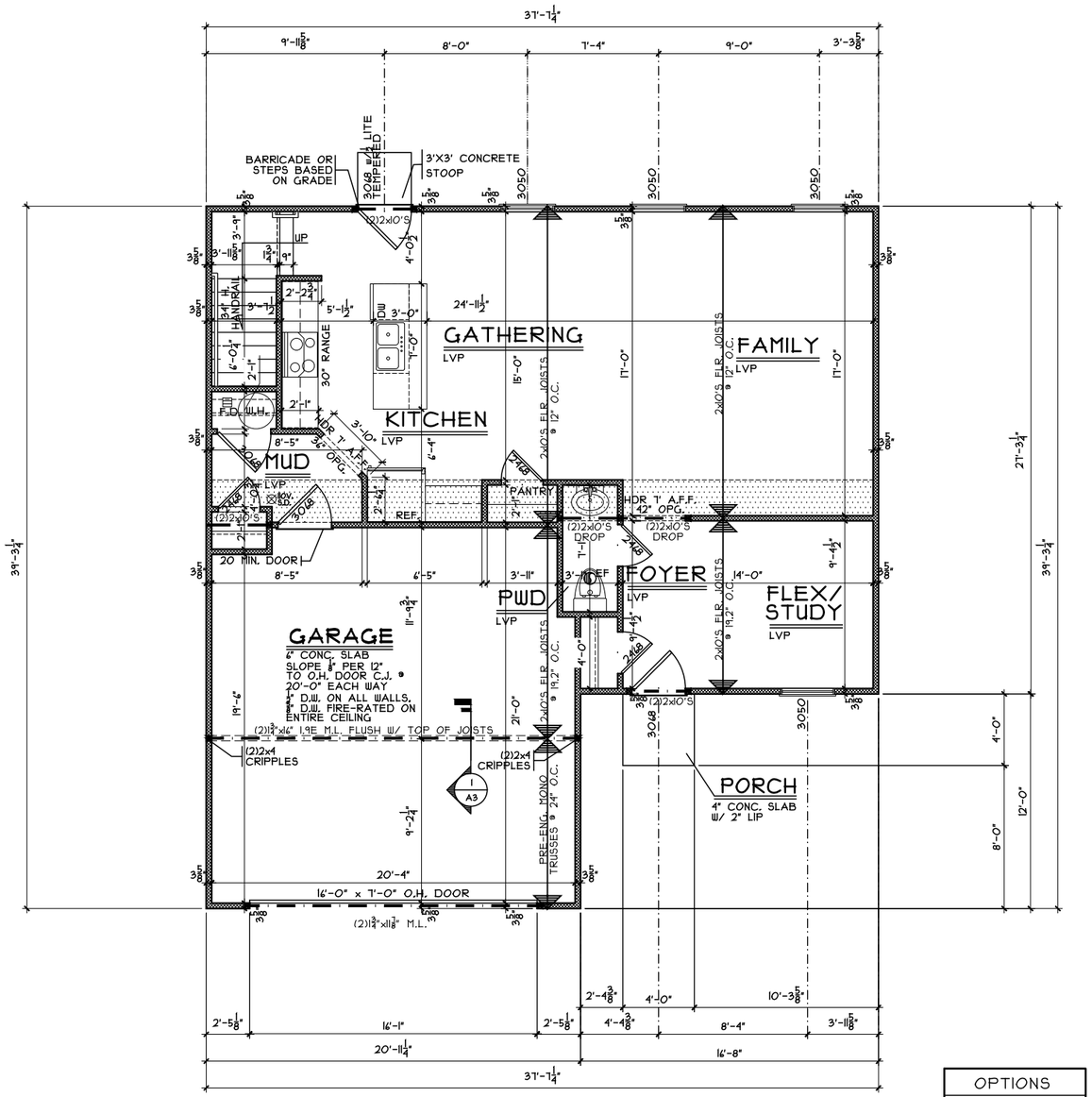

NOTE: ALL EXTERIOR DIMENSIONS ARE TO FACE OF FOUNDATION- MASONRY VENEER TO OVERHANG FOUNDATION AS REQ'D. TO ACCOMMODATE 1" AIRSPACE AT SHEATHING, MAXIMUM OVERHANG TO BE 3/4".

FIRST FLOOR PLAN

SCALE: 1/8" = 1'-0"

846 SQ. FT.

OPTIONS

Issue Dates

Review

Crownsfield Slab - A1 - Vinyl

Cristo Homes reserves all property rights in these plans. These plans are not to be reproduced, changed, or copied in any manner. They are not to be given to a third party, either in full or in part, without first receiving written permission from Cristo Homes. In the event these plans are used by a third party, Cristo Homes shall be held harmless.

Carlisle
Warren County

WV-52

Proposed Residence:
Cristo Rental
1607 Ashbury Ct
Waterbury Village Lot #52

CRISTO HOMES
7994-A Tylers Place Blvd.
West Chester, OH 45069
513.755.0570 www.cristohomes.com

First Floor Plan

Plan: Crownsfield Slab
Date : 8.18.2021
Drawn: SMC
Scale : As Noted
Revised: 9.27.2021
Sheet : 5 of 15

A3

CRI2115I.DWG • PLANS PREPARED BY SABO DESIGN ASSOCIATES • 550 WARDS CORNER ROAD SUITE 201, LOVELAND, OH 45140 • 513.683.1236 • SABODESIGNASSOC@SABODA.NET • © COPYRIGHT 2021 SABO DESIGN ASSOCIATES
H:\Archives\Cristo\CRI 1849 Crownsfield\SLAB\CONTRACTS\CRI 2115I WV-52 (Crownsfield)\CRI 2115I Crownsfield Slab WV-52.dwg Monday, September 27, 2021 5:04:41 PM

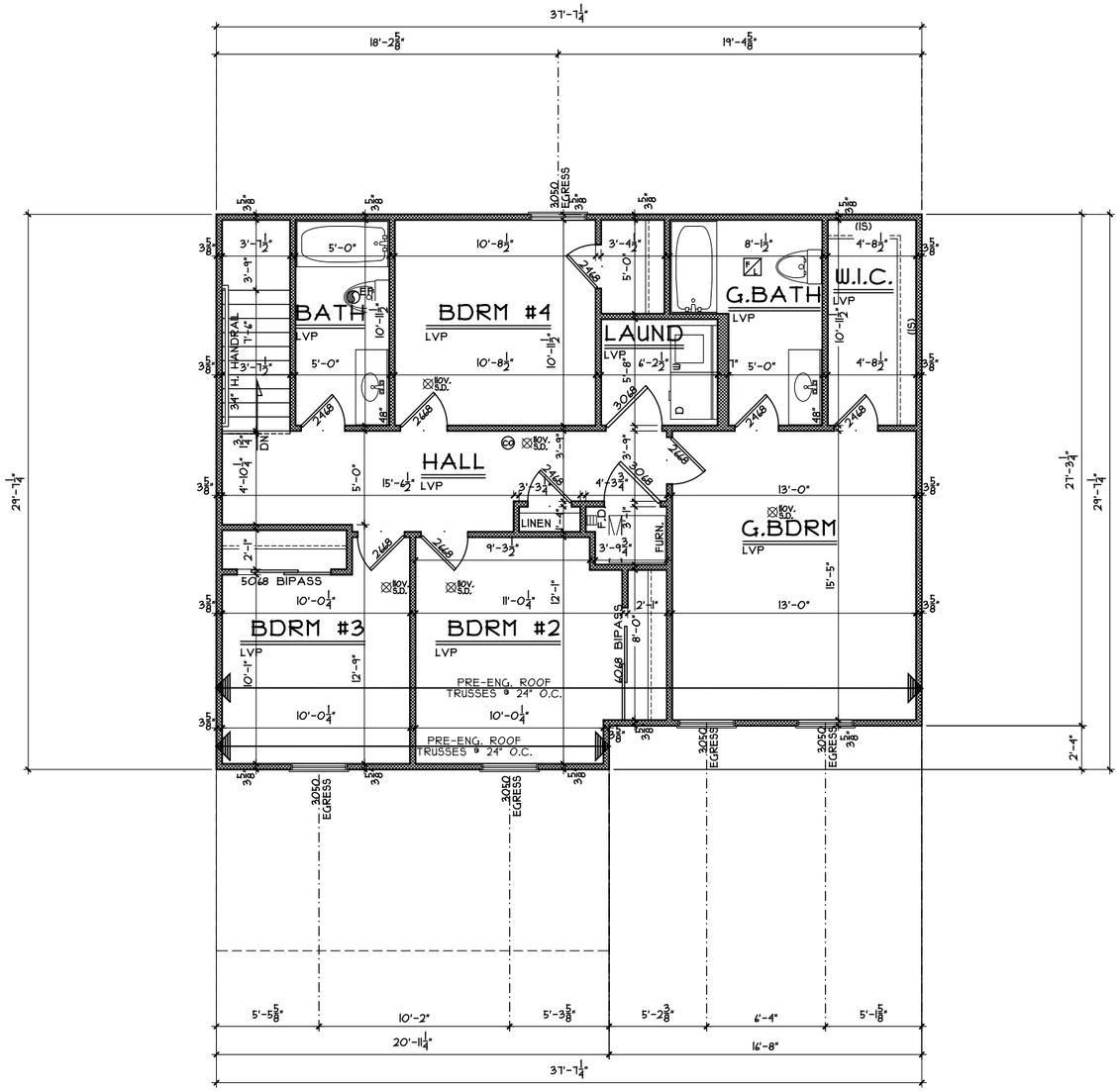

SECOND FLOOR PLAN

SCALE: 1/8" = 1'-0"

1029 SQ. FT.

NOTE: ALL EXTERIOR DIMENSIONS ARE TO FACE OF FOUNDATION- MASONRY VENEER TO OVERHANG FOUNDATION AS REQ'D. TO ACCOMMODATE 1" AIRSPACE AT SHEATHING. MAXIMUM OVERHANG TO BE 3/4".

OPTIONS

Issue Dates

Review

Crownsfield Slab - A1 - Vinyl

Cristo Homes reserves all property rights in these plans. These plans are not to be reproduced, changed, or copied in any manner. They are not to be given to a third party, either in full or in part, without first receiving written permission from Cristo Homes. In the event these plans are used by a third party, Cristo Homes shall be held harmless.

Carlisle

Warren County

WV-52

Proposed Residence:

Cristo Rental

1607 Ashbury Ct

Waterbury Village Lot #52

CRISTO HOMES
7994-A Tylers Place Blvd.
West Chester, OH 45069
513.755.0570 www.cristohomes.com

Second Floor Plan

Plan: Crownsfield Slab
Date : 8.18.2021
Drawn: SMC
Scale : As Noted
Revised: 9.27.2021
Sheet : 6 of 15

A4