PLOT PLAN
LOT 53 (12,001 SF) 0.2755 AC.
WATERBURY VILLAGE, SECTION 2
CITY OF CARLISLE
WARREN CO., OHIO
FOR: CRISTO HOMES

10 0 10 20 30

MARKET HOME
1605 ASHBURY COURT

SETBACKS
FRONT=35'
REAR=30'
SIDE=10'

C21
R=50.00'
L=36.14'

C47
R=50.00'
L=20.68'

M.F.O.E.=670.75
M.R.O.E.=669.00

TOP OF WINDOW WELLS OR BOTTOM OF BASEMENT WINDOWS TO BE AT OR ABOVE THE M.O.E.

FEMA FLOOD PANEL
39165C0012E, ZONE "AE".
EFFECTIVE: 12/17/2010
BASE FLOOD ELEV.=667.0

QUANTITIES

TOTAL LOT AREA=12,001 SF
CITY WALK=393 SF
HOUSE WALK=50 SF
DRIVE=833 SF
APRON=114 SF
PATIO & PORCHES=166 SF
DECK=X
SEEDING=10171 SF

STATE OF OHIO
KENNETH R. COMBS
7311
REGISTERED
PROFESSIONAL SURVEYOR

APEX IS NOT RESPONSIBLE FOR SOIL CONDITIONS OR GROUND WATER CONDITIONS.

GRADE/SPOT ELEVATIONS, FOUNDATION ELEVATIONS ARE ONLY RECOMMENDATIONS AND MAY VARY DUE TO SITE CONDITIONS.

INFORMATION FROM CONSTRUCTION DRAWINGS.

CONTRACTOR IS TO VERIFY LOCATION AND DEPTH OF WATER AND UTILITY SERVICES BEFORE CONSTRUCTION.

UNLESS F.F.E., M.O.E. OR M.B.E. ARE FIELD VERIFIED BY AN ENGINEERING FIRM, CONTRACTOR TAKES FULL RESPONSIBILITY FOR THE FINISH FLOOR ELEVATION.

A STANDARD FORMULA WAS USED TO DETERMINE FINISH FLOOR GRADE. FINAL FINISH FLOOR ELEVATION IS CONTRACTOR'S RESPONSIBILITY.

ALL ELEVATIONS ARE EXISTING UNLESS SPECIFIED WITH AN "E" FOR EXISTING OR A "P" FOR PROPOSED.

BUILDER SHALL PROVIDE POSITIVE DRAINAGE AROUND AND AWAY FROM HOUSES.

APEX ENGINEERING & SURVEYING INC.
ADVISES AGAINST HOLDING THE MINIMUM REQUIRED DISTANCE ON ANY AND ALL SETBACKS, FRONT, REAR, AND SIDES. THE BUILDER ASSUMES ALL RESPONSIBILITIES FOR ANY BUILDING ENCROACHMENTS THAT MAY OCCUR.

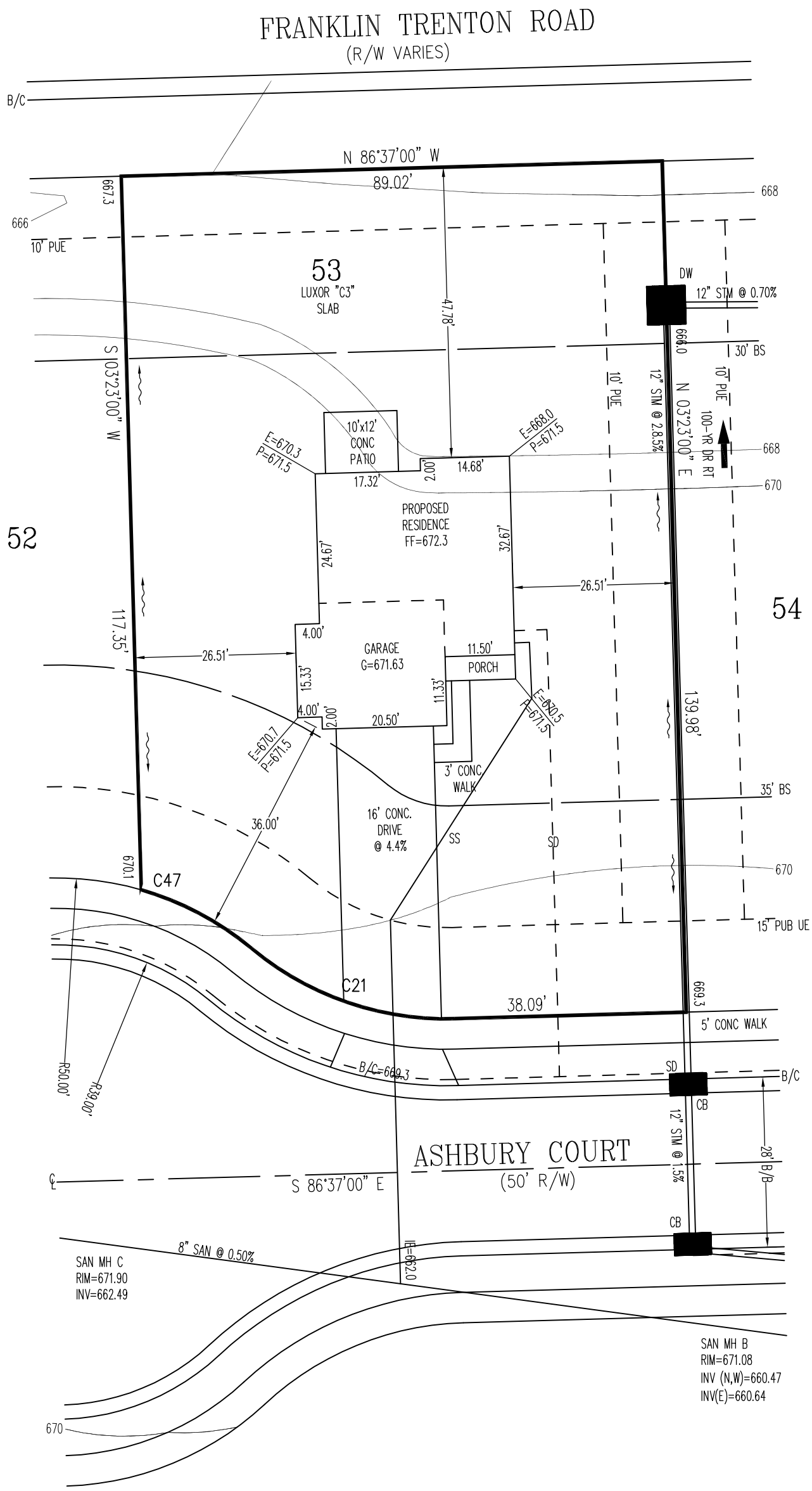

FOR PERMITTING PURPOSES ONLY.

TOPOGRAPHY FROM CONSTRUCTION PLANS.

MAY NOT REFLECT CURRENT CONDITIONS.

SCALE: 1"=20'
DATE: 09-03-21
DRAWN: JLL
DESIGNED:
CHECKED: KRC

APEX ENGINEERING & SURVEYING, INC.
1068 N. UNIVERSITY BLVD MIDDLETOWN, OHIO 45042
PH.-(513) 424-5202 OR (513) 932-8991 FAX - (513) 424-6202

REVISIONS:
1. 9/7/2021-REW-ADD PATIO
2.
3.
4.

PROJECT: WATERBURYVILL
DRAWING: 212248PA

SHEET 1 OF 1

CR121146.DWG • PLANS PREPARED BY SABO DESIGN ASSOCIATES • 550 WARDS CORNER ROAD SUITE 201, LOVELAND, OH 45140 • 513.683.1236 • SABODESIGNASSOC@SABODA.NET • © COPYRIGHT 2021 SABO DESIGN ASSOCIATES
H:\Archives\Cristo\CR121146 20230 Luxor\SLAB\CONTRACTS\CR121146 WV-53 (Luxor)\CR121146 WV-53 (Luxor).DWG Tuesday, November 17, 2020 4:09:04 PM

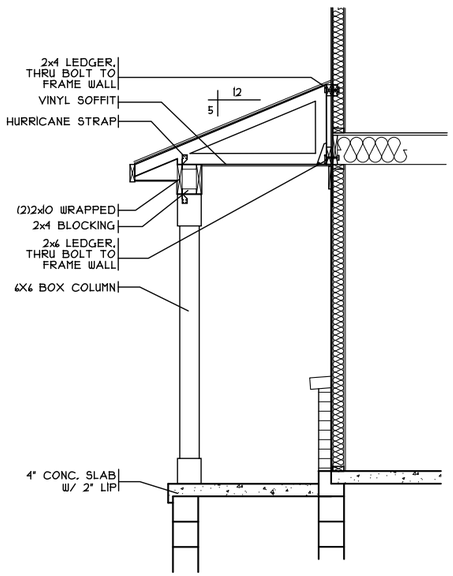

PORCH DETAIL

SCALE: 1/4" = 1'-0"

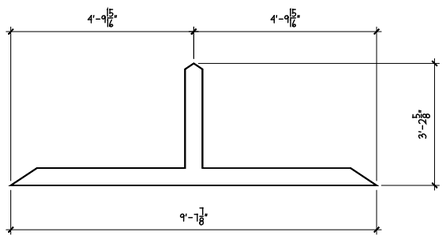

GABLE PEDIMENT DIMS

SCALE: 1/4" = 1'-0"

REAR ELEVATION

SCALE: 1/8" = 1'-0"

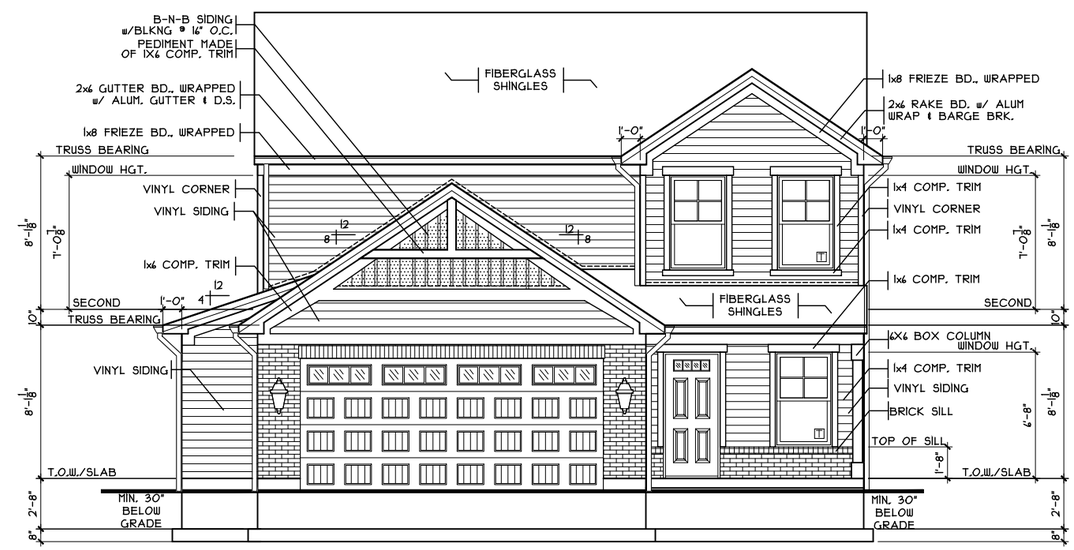

FRONT ELEVATION

SCALE: 1/8" = 1'-0"

SHEET INDEX	
SHT#	DESCRIPTION
A1	Front and Rear Elevations
A1a	Left and Right Elevations
A2	Foundation Plan
A3	First Floor Plan
A4	Second Floor Plan
A5	Typical Wall Sections/Stair Section
A6	Typical Framing Details
G1	General Notes
S1	Second Floor Structural Plan
E1	First and Second Floor Electrical Plan

NOTE:
PLANS PRINTED ON 24x36 SHEETS TO BE SCALABLE AT FULL SCALE, 1/4" = 1'-0"
PLANS PRINTED ON 11x17 SHEETS TO BE SCALABLE AT HALF SCALE, 1/8" = 1'-0"

PLAN INFO. 2S1716B4	
3 BDRMS	
2.5 BATH	
2 CAR GARAGE	
8' 1ST FLR. CLG.	
SQUARE FOOTAGE	
TOTAL	1716
FIRST	822
SECOND	894
LOW. LEV. FIN.	N/A
LOWER (SLAB)	780
GAR. (SLAB)	476

KEY PLAN

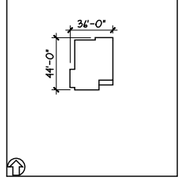

Issue Dates

Review

Luxor Slab - C3 - Vinyl

Cristo Homes reserves all property rights in these plans. These plans are not to be reproduced, changed, or copied in any manner. They are not to be given to a third party, either in full or in part, without first receiving written permission from Cristo Homes. In the event these plans are used by a third party, Cristo Homes shall be held harmless.

Carlisle
Warren County

WV-53

Proposed Residence:
Market Home
1605 Ashbury Court
Waterbury Village

CRISTO HOMES
7994-A Tylers Place Blvd.
West Chester, OH 45069
513.755.0570 www.cristohomes.com

Front And Rear Elevations

Plan: Luxor Slab
Date : 8.16.2021
Drawn: DCI
Scale : As Noted
Revised:10.29.2021
Sheet : 1 of 15

A1

CR121146.DWG • PLANS PREPARED BY SABO DESIGN ASSOCIATES • 550 WARDS CORNER ROAD SUITE 201, LOVELAND, OH 45140 • 513.683.1236 • SABODESIGNASSOC@SABODA.NET • © COPYRIGHT 2021 SABO DESIGN ASSOCIATES
H:\Archives\Cristo\CRI 20230 Luxor\SLAB\CONTRACTS\CRI 21146 WV-53 (Luxor)\CRI 21146 WV-53 (Luxor).DWG Tuesday, November 17, 2020 4:09:04 PM

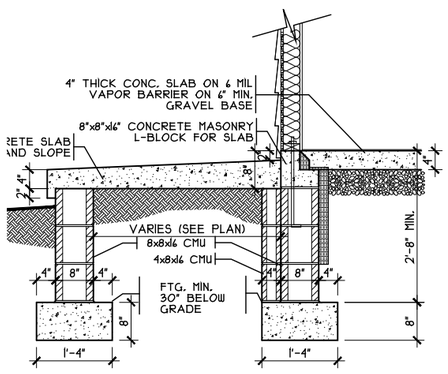

PORCH DETAIL

SCALE: 3/8" = 1'-0"

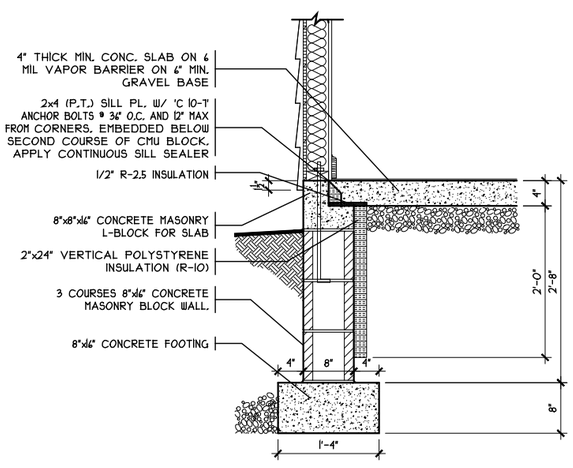

SOG DETAIL

SCALE: 1/8" = 1'-0"

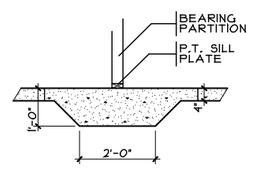

THICKENED SLAB

SCALE: 1/4" = 1'-0"

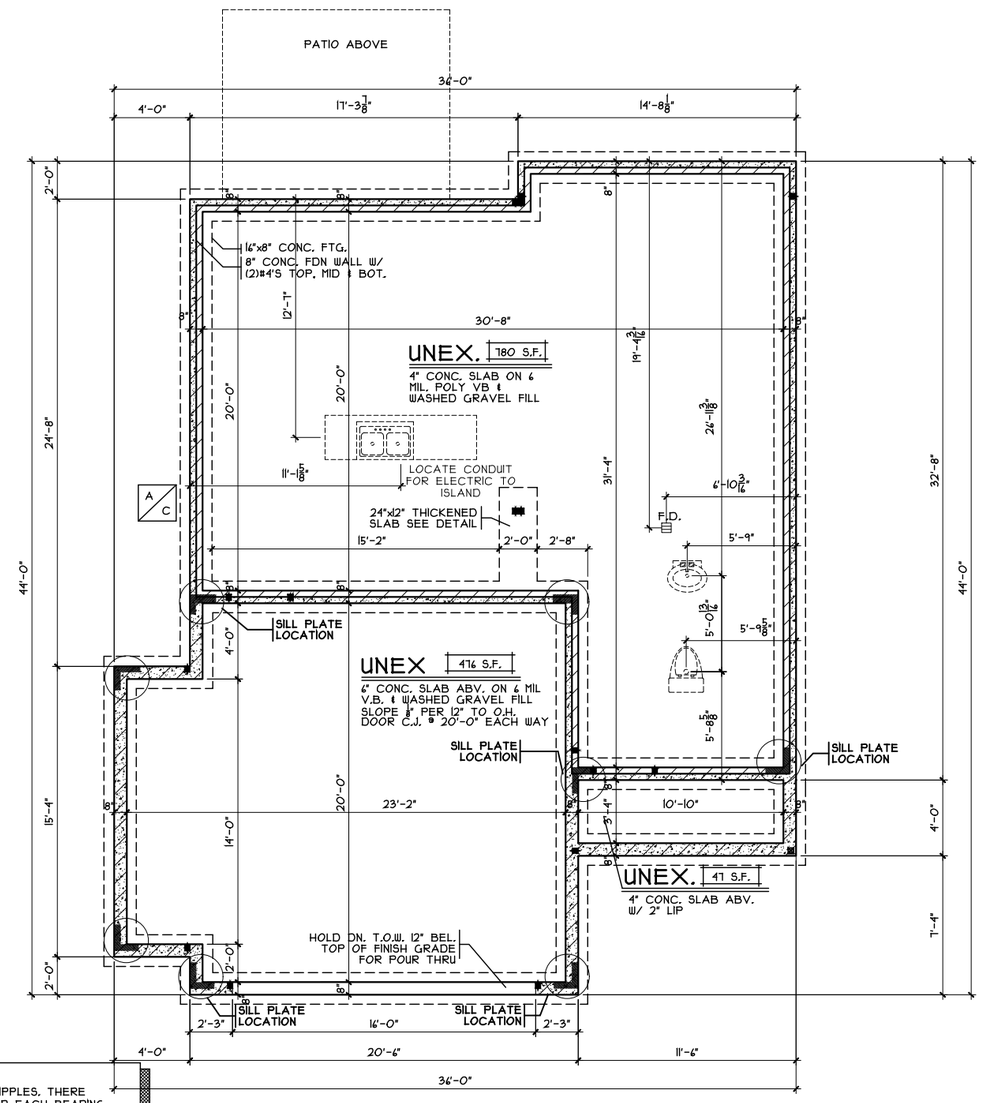

NOTE:
■ DENOTES BEARING CRIPPLES. THERE SHOULD BE ONE CRIPPLE FOR EACH BEARING MEMBER. CONTINUOUS TO SOLID BEARING BELOW.

FOUNDATION PLAN

SCALE: 1/8" = 1'-0"

Issue Dates

Review

Luxor Slab - C3 - Vinyl

Cristo Homes reserves all property rights in these plans. These plans are not to be reproduced, changed, or copied in any manner. They are not to be given to a third party, either in full or in part, without first receiving written permission from Cristo Homes. In the event these plans are used by a third party, Cristo Homes shall be held harmless.

Carlisle
Warren County

WV-53

Proposed Residence:
Market Home
1605 Ashbury Court
Waterbury Village

CRISTO HOMES
7594-A Tylers Place Blvd.
West Chester, OH 45069
513.755.0570 www.cristohomes.com

Foundation Plan

Plan: Luxor Slab
Date : 8.16.2021
Drawn: DCI
Scale : As Noted
Revised:10.29.2021
Sheet : 3 of 15

A2

CR121146.DWG • PLANS PREPARED BY SABO DESIGN ASSOCIATES • 550 WARDS CORNER ROAD SUITE 201, LOVELAND, OH 45140 • 513.683.1236 • SABODESIGNASSOC@SABODA.NET • © COPYRIGHT 2021 SABO DESIGN ASSOCIATES
H:\Archives\Cristo\CRI 20230 Luxor\SLAB\CONTRACTS\CRI 21146 WV-53 (Luxor)\CRI 21146 WV-53 (Luxor).DWG Tuesday, November 17, 2020 4:09:04 PM

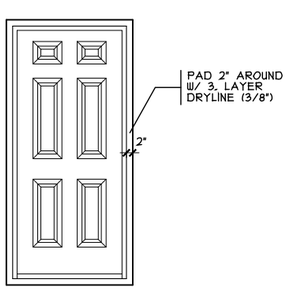

DOOR FRAMING DETAIL

SCALE: 1/4" = 1'-0"

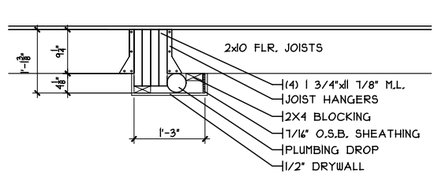

DROP CLG. DETAIL

SCALE: 3/8" = 1'-0"

NOTE:
▩ DENOTES BEARING CRIPPLES. THERE SHOULD BE ONE CRIPPLE FOR EACH BEARING MEMBER. CONTINUOUS TO SOLID BEARING BELOW.

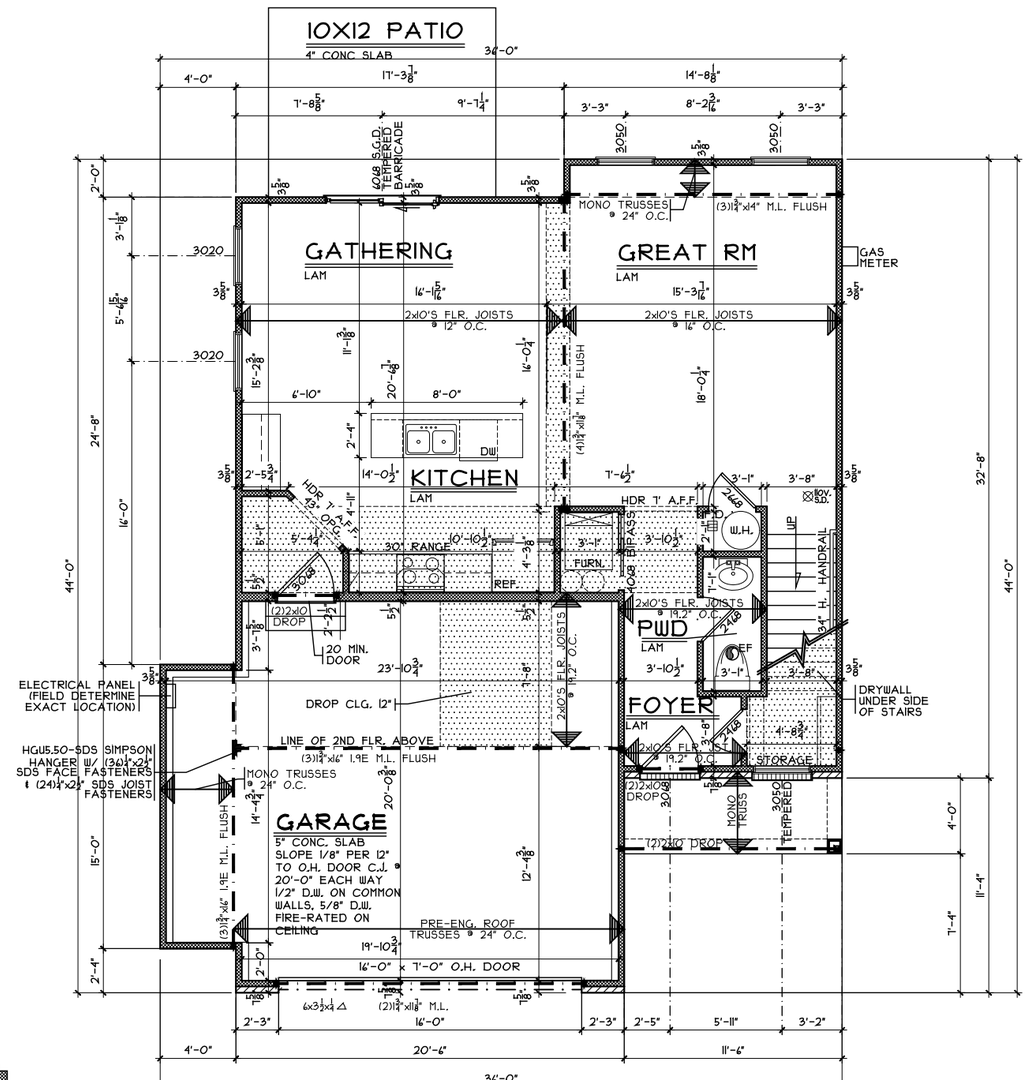

FIRST FLOOR PLAN

SCALE: 1/8" = 1'-0"

Issue Dates

Review

Luxor Slab - C3 - Vinyl

Cristo Homes reserves all property rights in these plans. These plans are not to be reproduced, changed, or copied in any manner. They are not to be given to a third party, either in full or in part, without first receiving written permission from Cristo Homes. In the event these plans are used by a third party, Cristo Homes shall be held harmless.

WV-53

Proposed Residence:
Market Home
1605 Ashbury Court
Waterbury Village

Carlisle
Warren County

CRISTO HOMES
7594-A Tylers Place Blvd.
West Chester, OH 45069
513.755.0570 www.cristohomes.com

First Floor Plan

Plan: Luxor Slab
Date : 8.16.2021
Drawn: DCI
Scale : As Noted
Revised:10.29.2021
Sheet : 5 of 15

A3

CRI2114G.DWG • PLANS PREPARED BY SABO DESIGN ASSOCIATES • 550 WARDS CORNER ROAD SUITE 201, LOVELAND, OH 45140 • 513.683.1236 • SABODESIGNASSOC@SABODA.NET • © COPYRIGHT 2021 SABO DESIGN ASSOCIATES
H:\Archives\Cristo\CRI 20230 Luxor\SLAB\CONTRACTS\CRI 2114G WV-53 (Luxor)\CRI 2114G WV-53 (Luxor).DWG Tuesday, November 17, 2020 4:09:04 PM

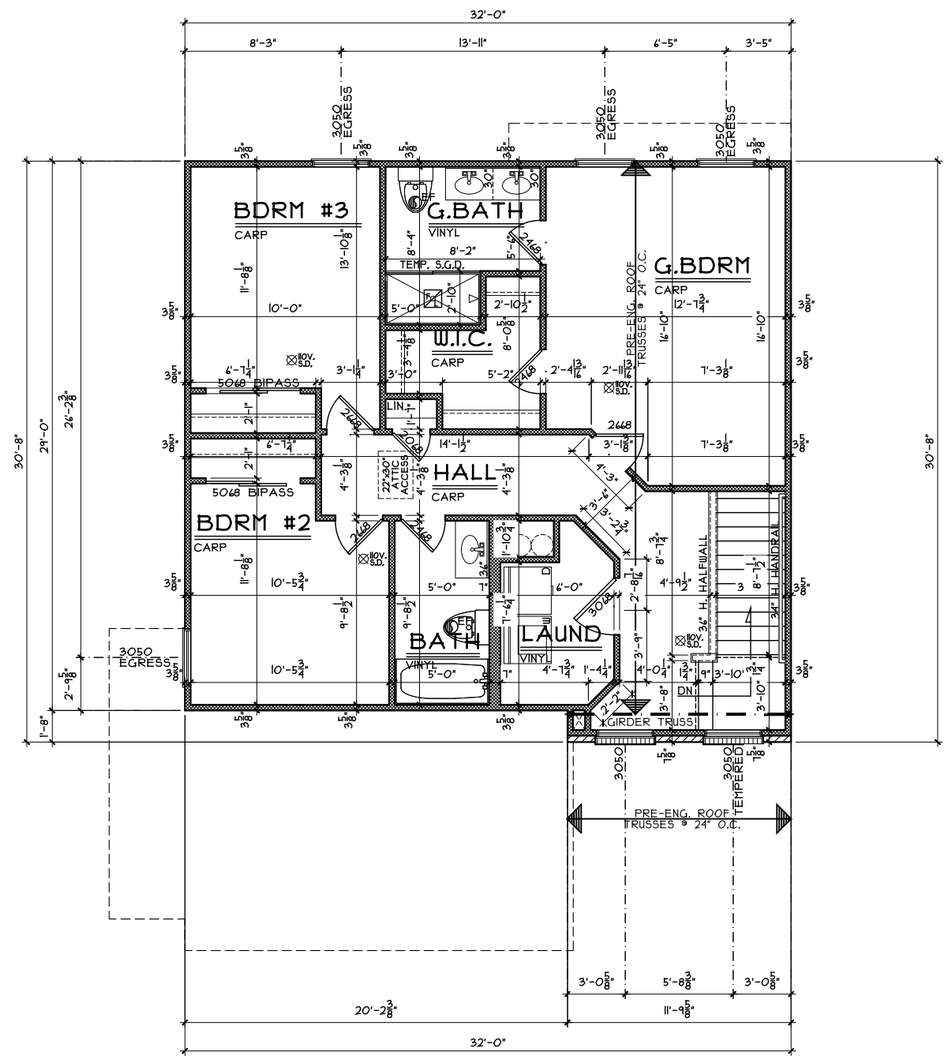

SECOND FLOOR PLAN

SCALE: 1/8" = 1'-0"

894 SQ. FT.

NOTE:
■ DENOTES BEARING CRIPPLES. THERE SHOULD BE ONE CRIPPLE FOR EACH BEARING MEMBER. CONTINUOUS TO SOLID BEARING BELOW.

Luxor Slab - C3 - Vinyl

Cristo Homes reserves all property rights in these plans. These plans are not to be reproduced, changed, or copied in any manner. They are not to be given to a third party, either in full or in part, without first receiving written permission from Cristo Homes. In the event these plans are used by a third party, Cristo Homes shall be held harmless.

Issue Dates

Review

Carlisle
Warren County

WV-53

Proposed Residence:

Market Home
1605 Ashbury Court
Waterbury Village

CRISTO HOMES
7594-A Tylers Place Blvd.
West Chester, OH 45069
513.755.0570 www.cristohomes.com

Second Floor Plan

Plan: Luxor Slab
Date : 8.16.2021
Drawn: DCI
Scale : As Noted
Revised:10.29.2021
Sheet : 6 of 15

A4